V1.1 · 2026-11-03

SK-RF CO.,Ltd

USER MANUAL

SKL5033 Module User Manual

Installation, Configuration and Operation

Document Type	Installation, Configuration and Operation Manual
Applicable Product	SKL5033A / SKL5033B Industrial Ethernet Wireless Modules
Applicable Firmware	V1.0.0 / FW_SKL5033_H01_V1.0.0.bin
Document Version	V1.1
Release Date	2026-11-03

Document Summary: This manual applies to paired SKL5033A / SKL5033B modules and covers installation, DIP switch settings, LED identification, normal operation and industrial Ethernet communication.

Contents

1 Functional Description
- 1.1 Main Functions
- 1.2 Functional Block Diagram

2 Interface Definitions

3 Electrical Characteristics

4 Mode Configuration
- 4.1 Selecting an Operating Mode
- 4.2 Changing the Operating Mode

5 Status Indicators
- 5.1 Steady-State Reference
- 5.2 Blue LED-S Flashing Indications

6 Communication Connections
- 6.1 Ethernet Cable Requirements
- 6.2 Computer and Device Port Configuration
  - 6.2.1 Windows Settings
  - 6.2.2 Example Computer IP Configuration
- 6.3 Connection and Normal Operation
  - 6.3.1 Establishing Communication
  - 6.3.2 Normal Operating Requirements

7 Assembly Instructions

8 Power-Up and Operation
- 8.1 Initial Power-Up

9 Link Interruption and Maintenance
- 9.1 Wireless Link Loss and FLD
- 9.2 Maintenance Mode 000
- 9.3 Recovery After an Interruption

10 Industrial Ethernet Communication
- 10.1 Supported EtherCAT Features
- 10.2 EtherCAT Operating Considerations
- 10.3 Supported PROFINET Features
- 10.4 PROFINET Operating Considerations

11 Data Tests
- 11.1 Test Preparation and Link-Speed Checks
- 11.2 Reachability and TCP Transfer Tests
- 11.3 UDP Transfer and Offered-Load Selection
- 11.4 Extended Tests and Result Recording
- 11.5 Wired Baseline and Assembly Verification
- 11.6 Functional and Application Verification

12 Common Questions and Operating Checks
- 12.1 Pre-Operation Checklist

12.2 Technical Support

13 Revision History

1 Functional Description

SKL5033 establishes a bidirectional full-duplex millimeter-wave data link between two Ethernet devices. SKL5033A incorporates an SKL3026A wireless unit and SKL5033B an SKL3026B; one A model and one B model form a pair. The module supports Gigabit Ethernet and 100 Mbit/s industrial Ethernet communication, including EtherCAT and PROFINET RT.

1.1 Main Functions

Table 1. Main Functions

Item	Description
Ethernet Interface	RJ45 interface; mode 111 auto-negotiation supports connections to Gigabit or 100 Mbit/s devices
Operation	Bidirectional transfer of Ethernet data over the wireless link.
Mode Selection	Three DIP-switch positions provide five modes: auto-negotiation, fixed 100 Mbit/s configurations and maintenance disconnection
Link Fault Propagation	Fast Link Drop (FLD): disconnects the local copper Ethernet port if the wireless link is lost; automatically attempts to re-establish the link after wireless recovery.
Address and Application Configuration	The module does not assign IP addresses. Configure IP addresses, device names and application parameters in the end devices or the project.

1.2 Functional Block Diagram

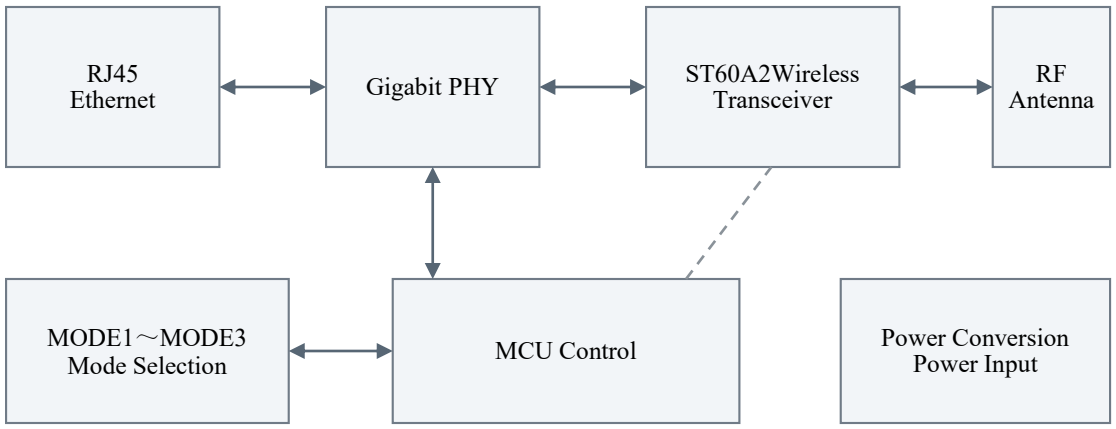

Figure 1. SKL5033 Functional Block Diagram

Solid lines indicate data paths; dashed lines indicate link monitoring or control connections. The A and B models use their respective millimeter-wave wireless units and have the same functional architecture. The diagram does not represent the physical arrangement of PCB components.

The A/B model designation does not determine the DIP switch mode or indicate a unidirectional data path. Select the DIP switch mode on each module according to the device connected to its RJ45 port.

2 Interface Definitions

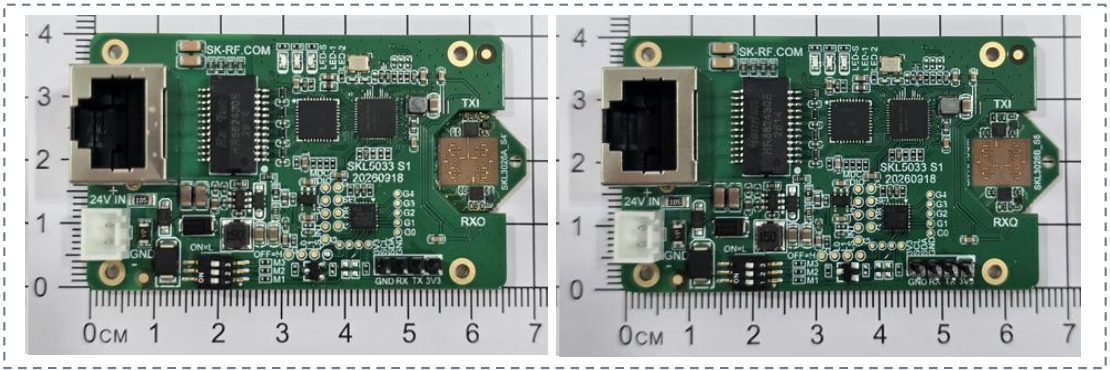

Figure 2. SKL5033A / SKL5033B Modules

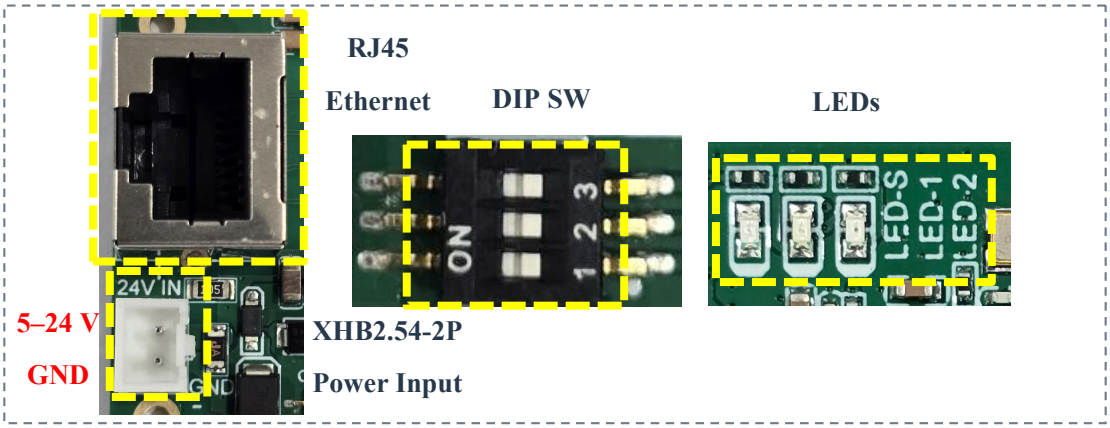

Figure 3. Ethernet Port, DIP Switch and LED Identification

Table 2. Appearance and Interface Identification

Identification	Operating Instructions
Product Identification	Verify the SKL5033A / SKL5033B markings. Use one module of each model as a matched pair.
RJ45 Port	Connect the local computer, PLC, switch or industrial device.
Power Input	Recommended supply range: 5–24 V, via an XHB2.54-2P connector. Verify polarity before connecting power.
MODE1～MODE3	Identify switch positions from the board markings and the ON label, rather than the left/right order in photographs. For DIP-switch modes, see Chapter 4.
LED Indicators	LED-S (blue): operating and wireless link status. LED-1 (green): RJ45 link status. LED-2 (yellow): Gigabit Ethernet link status. See Section 5.
Millimeter-Wave Antenna Area	Orient and secure both modules correctly. Maintain an unobstructed wireless path and avoid metal obstructions.

Prevent reverse polarity and cable strain during installation. The millimeter-wave link does not transfer power. Provide a separate supply for each side in accordance with its system requirements.

3 Electrical Characteristics

Table 3. Operating Requirements

Item	Requirement
Power Supply	Recommended supply range: 5–24 V. Power each module separately. Verify VIN and GND connections. Do not reverse the supply polarity.
Operating ambient temperature	−40 °C～+85 °C.
Wireless Installation Spacing	Transmission distance 1 ~ 8 cm; recommended spacing 2 ~ 6 cm(20 ~ 60 mm). Avoid placing the modules too close together or too far apart.

4 Mode Configuration

The PCB switches are identified as MODE3, MODE2 and MODE1. Mode codes are written in the order MODE3 → MODE2 → MODE1: OFF = 1 and ON = 0. For example, 110 means MODE3 = OFF, MODE2 = OFF and MODE1 = ON; 000 means all three switches are ON. Use the PCB silkscreen and the ON marking, rather than the left-to-right arrangement in a photograph.

Table 4. DIP Switch Operating Modes

Mode Code	MODE3	MODE2	MODE1	Operating Mode	Connected RJ45 Device Setting
111	OFF	OFF	OFF	Auto-Negotiation; automatic MDI/MDI-X; FLD enabled	Auto-Negotiation
110	OFF	OFF	ON	100 Mbps full duplex; automatic MDI/MDI-X; FLD enabled	100 Mbps full duplex
101	OFF	ON	OFF	100 Mbps full duplex; fixed MDI; FLD enabled	100 Mbps full duplex; match MDI/MDI-X configuration
100	OFF	ON	ON	100 Mbps full duplex; fixed MDI-X; FLD enabled	100 Mbps full duplex; match MDI/MDI-X configuration
000	ON	ON	ON	Maintenance mode; copper Ethernet port disabled	No communication required

Codes 001, 010 and 011 are reserved and keep the copper Ethernet port disconnected. Do not use these codes for normal operation.

4.1 Selecting an Operating Mode

For ordinary computer or switch connections, use mode 111 with the connected port set to auto-negotiation. For fixed 100 Mbit/s operation without a fixed wiring requirement, use mode 110 and set the connected port to 100 Mbps full duplex.

For fixed 100 Mbit/s operation with fixed wiring, select mode 101 (MDI) or 100 (MDI-X) according to the local RJ45 device. The A/B designation does not prescribe a mode, and the fixed-wiring modes at the two ends need not be complementary.

Both ends may use mode 111 auto-negotiation or fixed 100 Mbit/s modes. With mode 111, the system must ensure matching actual RJ45 speeds. For example, if one end is a 100 Mbit/s device, configure the computer or switch at the other end for a 100 Mbit/s link. Mode 000 suspends local wired communication.

4.2 Changing the Operating Mode

(1) Stop application communication and disconnect power from the module to be configured.

(2) Set the DIP switches and configure the connected RJ45 port for the required speed and duplex mode.

(3) Restore power, maintain antenna alignment, and check the links, LEDs and communication.

Do not change DIP switches during powered operation. For the initial check, allow approximately 15 seconds as an operating allowance, not a specified start-up time. Maintenance mode does not isolate power and cannot replace power isolation for servicing or an emergency stop.

5 Status Indicators

Table 5. Steady-On LED Indications

PCB Marking	Color	Steady-On Indication
LED-S	Blue	The module has entered normal operation.
LED-1	Green	The local RJ45 Ethernet link is established, at any supported link speed.
LED-2	Yellow	The local RJ45 port has established a 1000 Mbps (Gigabit Ethernet) link.

5.1 Steady-State Reference

For the four communication modes, both modules must be powered, the wireless link established and the local RJ45 link up. Maintenance mode indications apply after power-up and initialization.

Table 6. Steady-State LED Reference by Mode

Mode Code	Operating Mode	LED-S Blue	LED-1 Green	LED-2 Yellow
111	Auto-Negotiation	On	On	On for Gigabit; off for 100 Mbit/s
110	100 Mbit/s, automatic crossover	On	On	Off
101	100 Mbit/s, fixed MDI	On	On	Off
100	100 Mbit/s, fixed MDI-X	On	On	Off
000	Maintenance / safe state	Off	Off	Off

5.2 Blue LED-S Flashing Indications

Table 7. Blue LED-S Flashing Indications

State	Meaning and Action
Slow flash, approximately 1 Hz	Waiting for the wireless link. Check power at the other end, the wireless path and antenna alignment.

State	Meaning and Action
Fast flash, approximately 5 Hz	Link recovery pending or Ethernet PHY initialization fault. This may occur briefly during recovery. If rapid flashing persists without communication, check power and the wireless link; contact technical support if necessary.
Off	The module may be in maintenance mode, link training or unpowered. An unlit blue LED alone does not identify a fault.

Blue LED-S is not simply a power indicator, and yellow LED-2 is not a fault indicator. Yellow off is normal in 100 Mbit/s mode. The three LEDs do not flash to show data activity. Check application readiness on the end devices or controller.

6 Communication Connections

6.1 Ethernet Cable Requirements

Normally use compliant Cat5e or higher-category RJ45 straight-through cables with all eight conductors connected. Both ends of a straight-through cable use T568A or both use T568B. A four-conductor 100 Mbit/s cable cannot replace an eight-conductor cable for Gigabit operation.

MDI/MDI-X describes the transmit/receive pair arrangement at the local RJ45 port, not wireless transmit/receive roles. If the connected port also uses fixed wiring without automatic crossover, select the cable according to the table below.

Table 8. Cable and Port Wiring Compatibility

Local Module Mode	Connected Port Fixed Wiring	Ethernet Cable
101 Fixed MDI	MDI-X	Straight-through
101 Fixed MDI	MDI	Crossover
100 Fixed MDI-X	MDI	Straight-through
100 Fixed MDI-X	MDI-X	Crossover

Use a straight-through cable between different fixed wiring types and a crossover cable between identical types. If the connected port's wiring is unknown, first use mode 110 with automatic crossover to verify basic connectivity, then select fixed wiring as required. Automatic crossover behavior may change when 100 Mbit/s is forced; verify the actual configuration.

6.2 Computer and Device Port Configuration

Table 9. Module and Connected Port Configuration

Module Mode	Connected RJ45 Device Setting	Port State
111 Auto-negotiation	Auto-Negotiation	Actual link speed, such as 1 Gbps or 100 Mbps, determined by the connected port's capabilities
110 / 101 / 100	100 Mbps full duplex	100 Mbps full duplex
000 Maintenance	No communication required	Local wired port disconnected

For fixed 100 Mbps full duplex, configure the connected port to 100 Mbps full duplex as well. A successful ping does not prove matching duplex; verify the effective configuration.

6.2.1 Windows Settings

(1) Open Device Manager → Network adapters → select the wired adapter actually connected to the module.

(2) Open Properties → Advanced → Speed & Duplex.

(3) Select auto-negotiation or 100 Mbps full duplex to match the module mode. Apply the setting and check the actual link.

Run the following commands on the computer to query adapter status in PowerShell:

```
Get-NetAdapter -Physical | Format-Table Name,Status,LinkSpeed,MediaDuplexState,FullDuplex
```

`Status=Up`indicates link up; `MediaDuplexState=2`and `FullDuplex=True`indicates that the driver reports full duplex. A value of 1 means half duplex; 0 or an empty value means unknown. Use the adapter manufacturer's utility to confirm if necessary.

6.2.2 Example Computer IP Configuration

Table 10. Example Computer IP Configuration

Item	Computer A	Computer B
IPv4 address	192.168.11.119	192.168.11.114
Subnet mask	255.255.255.0	255.255.255.0
Gateway and DNS	May be left blank for an isolated two-computer connection	May be left blank for an isolated two-computer connection

Apply the addresses to the wired adapters actually connected to the modules. On a computer with multiple adapters, ensure that the application uses the module-connected port. Restore the original network's required address configuration before reconnecting to it.

6.3 Connection and Normal Operation

6.3.1 Establishing Communication

(1) Use Chapter 6 to connect the cables and ports, follow Section 7 to assemble and align the antennas, then follow Section 8 for initial power-up. Confirm that one SKL5033A and one SKL5033B are used.

(2) Select the mode according to the connected device. Ordinary computers and switches normally use 111. Fixed 100 Mbit/s devices use 110, 101 or 100, with the connected port set to 100 Mbps full duplex.

(3) Power both ends and wait for wireless and wired links. Steady blue LED-S indicates normal operation; steady green LED-1 indicates the local RJ45 link is up. Yellow LED-2 is steady for a Gigabit link.

(4) Use the existing application on the computer, PLC or industrial device. The module does not assign IP addresses or replace end-device network/application configuration.

6.3.2 Normal Operating Requirements

Keep both antenna positions and orientations fixed. Avoid metal obstructions, cable tension and loose power connections. Do not change DIP switches during operation. Stop the application and disconnect power before changing modes.

If LED indications are abnormal or communication is interrupted, first check power, DIP settings, antennas and cables, then follow Chapter 12 for troubleshooting. Resume equipment operation after confirming normal link and application states.

7 Assembly Instructions

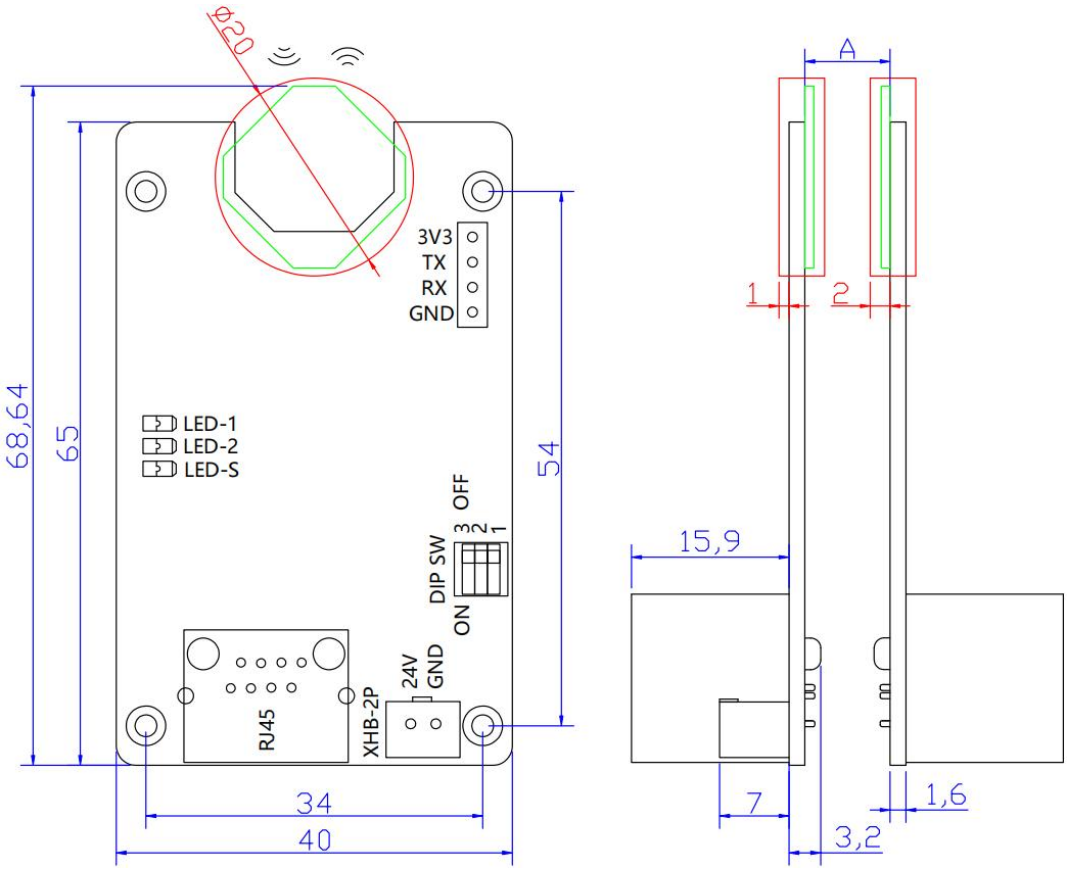

Dimensions shown in blue are in mm.

Figure 4. SKL5033 PCBA mounting dimensions

Before installation, refer to Figure 4 to check mounting-hole positions, board thickness, connector orientation and antenna locations. Cyan indicates the antenna module; red indicates the antenna keep-out area. Blue dimensions are in mm.

Position the antenna faces opposite each other and align them correctly. Recommended installation spacing A is 2 ~ 6 cm(20 ~ 60 mm). The module transmission-distance range is 1 ~ 8 cm. Avoid placing the modules too close together or too far apart. After mounting, prevent cable tension from changing position or orientation.

Mounting structures must not intrude into the red antenna keep-out area. Avoid metal obstructions. For a metal enclosure, provide a millimeter-wave window at the antenna position and verify that the window material and structure do not impair the link.

8 Power-Up and Operation

8.1 Initial Power-Up

(1) Prepare one SKL5033A, one SKL5033B, two compliant Ethernet cables and suitable supplies.

(2) With power disconnected, check voltage, polarity and wiring; connect each RJ45 port to its local device.

(3) Set the DIP switches and configure each connected RJ45 device to match the module's speed and duplex.

(4) Secure both modules with antennas correctly aligned and an unobstructed wireless path.

(5) Power both ends. Verify normal operation on LED-S and wired link establishment on LED-1. LED-2 is on for Gigabit and off for 100 Mbit/s. Then confirm normal end-device or application communication.

Until the millimeter-wave link is established, normal communication modes may actively keep the local wired port disconnected. This is part of FLD and link-establishment control; a "network cable unplugged" message alone does not establish a cable fault.

9 Link Interruption and Maintenance

9.1 Wireless Link Loss and FLD

FLD (Fast Link Drop) is enabled in modes 111, 110, 101 and 100. When wireless link loss is detected, the module disconnects its local copper Ethernet port so that the connected computer, switch or industrial device detects the link failure.

After the wireless path recovers, the module automatically attempts to re-establish the wired link. Blue LED-S flashes slowly while waiting for the wireless link and may flash rapidly during recovery. Normal indications return once the link is stable.

Wired link re-establishment does not mean that the PLC or application has fully recovered. Alarm acknowledgement, slave reconnection and output recovery are determined by the controller, end devices and project configuration.

9.2 Maintenance Mode 000

To suspend local wired communication, stop the application, record the original mode and disconnect module power. Set MODE3, MODE2 and MODE1 all to ON for mode 000, then restore power.

After initialization, the local RJ45 port remains disconnected and LED-S, LED-1 and LED-2 are off. The wireless section may remain connected. Maintenance mode does not isolate power and cannot replace power-off servicing or an emergency stop.

To exit maintenance mode, disconnect power, restore the original communication mode and power up again. Resume the application after checking ports, LEDs and end-device status.

9.3 Recovery After an Interruption

If communication is interrupted, check both supplies, antenna alignment and the wireless path. Confirm a normal communication DIP mode. After wireless recovery, wait for stable links, then check controller/end-device online status. Acknowledge or reset alarms according to the device instructions where required.

If the link still does not recover, follow Chapter 12 and contact technical support. FLD propagates link failure; it provides neither wireless packet retransmission nor a guarantee of uninterrupted application operation.

10 Industrial Ethernet Communication

SKL5033 supports EtherCAT and PROFINET RT as a transparent wireless transport channel between Ethernet devices. The module is not configured as an EtherCAT slave or PROFINET IO device. Configure master, PLC and I/O addresses, device names, cycles and I/O mappings in the original devices or engineering project.

10.1 Supported EtherCAT Features

Table 11. Supported EtherCAT Features

Feature	Operating Instructions
Transparent frame transmission	Provides a bidirectional data channel between EtherCAT devices, carrying communication frames between master and slaves.
Cyclic process data	Supports cyclic I/O exchange for the master to read inputs and update outputs.
100 Mbit/s full-duplex connection	Provides three fixed 100 Mbit/s full-duplex modes: 110 automatic crossover, 101 fixed MDI and 100 fixed MDI-X.
Link-fault propagation and recovery	FLD disconnects the local wired port on wireless link loss; link re-establishment is attempted automatically after wireless recovery.

10.2 EtherCAT Operating Considerations

Select 100 Mbps full-duplex settings matching the EtherCAT ports at both ends. Use 110 if the connected port's wiring is unknown. Where fixed wiring is required, select 101 or 100 for the local port and follow Section 6.1 to select a straight-through or crossover cable.

Connect input and downstream ports according to the EtherCAT device markings, retaining the existing master/slave relationships and project configuration. Before enabling communication, verify that the master recognizes all required slaves and that the devices enter the operating state specified by the project.

Wireless interruption stops cyclic data transfer. Configure the master's communication cycle, watchdog and recovery logic to meet device requirements. Output holding or safe states during faults are determined by the slaves and control program.

For Distributed Clocks (DC), synchronized motion control or strict cyclic timing, verify wireless-link latency and synchronization suitability during product selection. Support for ordinary I/O communication does not establish compliance with every synchronization-accuracy or cycle-time requirement.

10.3 Supported PROFINET Features

Table 12. Supported PROFINET Features

Feature	Operating Instructions
PROFINET RT communication	Carries PROFINET RT cyclic process data between the IO controller and IO devices.
Existing device and project configuration	Device names, IP addresses and I/O mappings remain configured in the end devices or PLC project; the module does not replace these settings.
Fixed speed and wiring	Modes 110, 101 and 100 provide fixed 100 Mbps full duplex; 101 and 100 additionally provide fixed MDI/MDI-X.
Link-fault propagation and recovery	Propagates wireless link loss to the local wired port; automatically attempts link re-establishment after wireless recovery. The application recovers according to PLC and IO-device settings.

10.4 PROFINET Operating Considerations

Use 111 for ordinary auto-negotiated connections. For fixed 100 Mbit/s or fixed wiring, select 110, 101 or 100 and configure the corresponding PLC, switch or IO-device port accordingly. Speed and duplex must match at both ends.

Set device names, IP addresses, I/O mappings, update time and monitoring time correctly in the PLC project. Before use, verify that the actual IO devices are online and process data is correct. RJ45 link-up or ping replies alone do not establish PROFINET application readiness.

Modes 101 and 100 provide fixed 100 Mbit/s and fixed MDI/MDI-X for use with PROFINET Fast Start-Up (FSU) port settings. FSU requires support from the controller, I/O devices, ports and project. Actual application start-up time depends on the complete system.

Reconnection, alarm acknowledgement and output behavior after interruption depend on PLC and IO-device configuration. Confirm suitability of the complete system and module in advance for IRT, precision motion synchronization or functional safety communication.

11 Data Tests

11.1 Test Preparation and Link-Speed Checks

Connect the computers to the paired SKL5033 modules as described under Communication Connections. Set Computer A to 192.168.11.119 and Computer B to 192.168.11.114, both with subnet mask 255.255.255.0. Use addresses not already in use on site; no gateway is required for an isolated local test.

Use one SKL5033A and one SKL5033B. In mode 111, check both negotiated speeds. In modes 110, 101 and 100, check 100 Mbit/s full duplex and MDI/MDI-X wiring.

Install the same version of iperf3 on both computers. Select the wired adapters connected to the modules and prevent test traffic from using Wi-Fi or other ports. Allow ping and iperf3 through the firewall for the test network. For Gigabit connections, use suitable cables with all four pairs connected.

Read the actual link speed and duplex status at both ends, select a speed supported by both devices, and complete a wired baseline test. Record the module, firmware, mode, network adapter, cable and software versions.

11.2 Reachability and TCP Transfer Tests

Check B from Computer A, then check A from Computer B:

```
ping -S 192.168.11.119 192.168.11.114 -n 20
ping -S 192.168.11.114 192.168.11.119 -n 20
```

Confirm that each direction receives 20 valid replies from the remote computer with no packet loss. Local errors such as "Destination host unreachable" or "General failure" are not remote replies. Record the maximum, minimum and average round-trip times. Use ping to check network reachability; check industrial cyclic data and I/O states separately.

Start the server on Computer A and leave its window open:

```
iperf3 -s -B 192.168.11.119
```

On Computer B, run the forward and reverse TCP tests in sequence. Each test runs for 60 seconds and reports once per second:

```
iperf3 -c 192.168.11.119 -B 192.168.11.114 -t 60 -i 1
iperf3 -c 192.168.11.119 -B 192.168.11.114 -t 60 -i 1 -R
```

The first command transfers data from B to A; the command with -R transfers data from A to B. The server remains on A. Run these tests sequentially, rather than simultaneously. Record the receiver summary rate, per-second variations and Retr retransmission count, where supported, and observe the indicators and link state.

11.3 UDP Transfer and Offered-Load Selection

Keep the server running on Computer A. On Computer B, run the following UDP tests separately:

```
iperf3 -c 192.168.11.119 -B 192.168.11.114 -u -b 80M -l 1400 -t 60 -i 1
iperf3 -c 192.168.11.119 -B 192.168.11.114 -u -b 80M -l 1400 -t 60 -i 1 -R
```

Use MTU 1500 for the baseline test. This example uses an offered load of 80 Mbit/s, a 1400-byte UDP payload and a duration of 60 seconds. Choose the initial load for the actual port speed, increase it only after the preceding step is stable, and stop when the application requirement is met. Suggested test loads are:

(1) 100 Mbit/s link: start at 50M, then test 80M and 100M.

(2) 1000 Mbit/s link: start at 100M, then test 500M, 800M and 1000M.

Read the receiver statistics on A for the forward test and on B for the reverse test. Record the receiver rate, Lost/Total Datagrams, packet loss percentage and Jitter. For the baseline check, aim for a receiver rate close to the offered load with zero packet loss. The -b option specifies offered load, not measured throughput. Select the load using the lower actual link capacity of the two ends and the wired baseline.

11.4 Extended Tests and Result Recording

(1) To identify a host single-stream limit, append -P 4 to each TCP command and compare the receiver [SUM] result with the single-stream result, keeping all other conditions unchanged. If both versions support --bidir, run a separate simultaneous bidirectional TCP test and record each direction.

(2) For the earlier 80 Mbit/s UDP test conditions, stop the persistent server on A with Ctrl+C. Start the one-off server below before each run, wait until it is listening, and then run the client command on B:

```
iperf3 -s -1 -B 192.168.11.119
iperf3 -c 192.168.11.119 -B 192.168.11.114 -u -b 80M -l 1400 -w 16M -t 30 -i 1
```

Restart the one-off server before the reverse test and append -R to the client command. If the operating system rejects -w 16M, omit it at both ends or use an accepted value and record the change. After this test, restart the persistent server for the other tests.

(3) Once both directions are stable, extend the successfully tested load to 30 minutes or the duration specified for the project. For a 30-minute test, replace -t 60 with -t 1800. Record link interruptions, program exits and application reconnections separately. These are test procedures and do not constitute a record of completed testing.

(4) Save the complete output from both ends. Record the commands used, direction, duration, offered load, port speed, duplex, IP addresses, MTU, tool version and receiver statistics. Transfer is the amount of data transferred; Bandwidth/Bitrate is the transfer rate; Jitter is the variation in received datagram interarrival time; Lost/Total Datagrams gives the lost and total datagram counts. Calculate packet loss percentage as lost datagrams divided by total datagrams. Results showing 0 Bytes, 0/0 datagrams, connection failures or tool errors are not valid passes.

11.5 Wired Baseline and Assembly Verification

(1) Remove the link formed by the two modules and connect the computers directly with an Ethernet cable. Repeat the tests with the same IP addresses, actual port speeds, duplex, MTU, direction, offered load, duration and commands. Compare receiver throughput, packet loss, jitter and TCP retransmissions.

(2) Restore the wireless connection and repeat both directions with the final antenna spacing and alignment, enclosure, window material and thickness, brackets and secured wiring. Select test positions within the assembly and temperature conditions specified for this model. Record supply voltage, temperature, spacing, offset and duration.

(3) After servicing, cable replacement or mechanical adjustment, recheck power and mode settings, then repeat the communication tests. If a problem occurs, first use the wired baseline to check the hosts, cables and test configuration, then check antenna alignment, obstructions and power.

11.6 Functional and Application Verification

(1) Follow Chapter 4 check mode 111 auto-negotiation and fixed 100 Mbit/s full-duplex modes 110, 101 and 100. For fixed wiring, check MDI/MDI-X, cables and end-device settings separately. Record actual port speeds and duplex states.

(2) Follow Section 9 check FLD: establish normal communication, interrupt the wireless path and observe local wired Link Down. Restore antenna alignment, then check link re-establishment and application recovery. Check port and application states after entering and leaving maintenance mode 000. Disconnect power as instructed before adjusting DIP switches.

(3) Follow Chapter 10 to connect the actual EtherCAT or PROFINET system. Check master/slave or IO-device online status, cyclic data and actual inputs/outputs. Record link interruption, power cycling and recovery. For FSU, verify fixed 100 Mbit/s operation, wiring and matching controller/IO-device settings. PLC cyclic-data and I/O checks are separate from ping and iperf3 tests.

12 Common Questions and Operating Checks

Table 13. Common Problems and Corrective Actions

Symptom	Checks and Corrective Action
Ethernet link down after power-up	Verify power on both sides, antenna alignment and secure Ethernet connections. Check for maintenance mode 000 or a reserved mode code. The local Ethernet port may remain disconnected until the wireless link is established.
Mode 111 establishes only a 100 Mbit/s link	Check Gigabit support, auto-negotiation at both ends and all eight cable conductors. Replace the cable with a known-good Cat5e or higher-category cable.
Mode 110 works, but mode 101 or 100 does not	Verify that the connected port's MDI/MDI-X configuration matches the straight-through or crossover cable. See Section 6.1.
Ethernet link up, but no application communication	Check end-device addresses, device names, project configuration, and port speed and duplex settings. For a computer connection, also check the Ethernet adapter, firewall and source IP address.
Blue LED-S flashes slowly	Waiting for the wireless link. Check power on the other side, the wireless path and antenna alignment.
Blue LED-S continues flashing rapidly	Link recovery may be pending or Ethernet PHY initialization may have failed. Check the power supply and wireless path. Contact technical support if the condition persists.
Green LED-1 on; yellow LED-2 off	Local Ethernet link established without Gigabit; normal in 100 Mbit/s mode.
All three LEDs are off	First check power and the DIP switches. All three LEDs are normally off in maintenance mode 000 and may also be off during link training.
Industrial device alarm remains after wireless recovery	Confirm that both Ethernet ports and LEDs have returned to normal. Then follow the controller and IO device instructions for reconnection or alarm acknowledgement. Module link establishment and application recovery are separate states.

12.1 Pre-Operation Checklist

□ One SKL5033A and one SKL5033B are used as a matched pair; supply voltage and polarity are correct on both sides.

□ Mode codes meet application requirements; connected port speed, duplex and MDI/MDI-X settings match.

□ Ethernet cables are secure; antennas are correctly aligned and fixed; the wireless path is clear.

□ LED-S, LED-1 and LED-2 indications match the operating mode and link status.

□ Controller and end-device online status, I/O mappings and fault handling settings meet application requirements.

12.2 Technical Support

When requesting support, provide the module models and markings, firmware version, photographs of both DIP switch settings and wiring, connection topology, connected device models, port speed/duplex settings, fault symptoms and triggering conditions. For industrial networks, include PLC or master status and alarm information.

13 Revision History

Date	Revision	Description of Changes
2026-11-02	V1.0	Initial Chinese edition; first formal release of the SKL5033 User Manual.
2026-11-03	V1.1	(1) Standardized the cover, document summary, contents and revision history; aligned interface, LED and explanatory table widths, row heights and cell padding. (2) Organized assembly, power, mode selection, computer configuration, normal operation and link-interruption handling, with corresponding references. (3) Retained the EtherCAT and PROFINET operating instructions, troubleshooting and pre-operation checks; checked internal navigation. (4) Standardized chapter names, order and content allocation using the common outline, retaining technical descriptions and illustrations; updated the contents, figure/table numbering and internal references. Moved initial power-up under Power-Up and Operation, standardized Common Questions and Operating Checks, and added the information required for technical support. (5) Added simple bidirectional ping, iperf3 single-stream TCP and 80 Mbit/s UDP tests from the companion test plan, including server operation, forward and reverse commands, receiver statistics and retesting after assembly; updated the contents and internal references. (6) Standardized Ethernet test sections; added bidirectional reachability, TCP, UDP loads by actual link speed, extended records and wired comparisons, with functional checks tailored to this model's configuration. Retained the original test illustrations and updated contents and internal references. (7) Prepared and checked this English edition against the current Chinese edition, preserving numbered items, parameters, illustrations, commands and operating instructions.