V1.5 · 2026-11-04

SK-RF CO.,Ltd

USER MANUAL

SKL5010 Module User Manual

USB and Auxiliary Interface Installation, Configuration and Operation

Document Type	User assembly, configuration and operation manual
Applicable Product	SKL5010A / SKL5010B
Release Date	2026-11-04
Document Version	V1.5

Document Summary: Provides instructions for SKL5010A/B pairing, USB connections, auxiliary-interface configuration, power and installation checks for product integration and functional debugging. Interface modes must match the supplied firmware.

Contents

1 Functional Description

2 Interface Definitions

3 Electrical Characteristics

4 Mode Configuration

5 Communication Connections

5.1 USB Connection

5.2 Mobile Phone Connection Example

5.3 UART Connection and Debugging

5.3.1 Debugging Procedure

5.4 GPIO and I2C Connections

6 Assembly Instructions

7 Power-Up and Operation

7.1 Power and Logic-Level Checks

7.2 Initial Power-Up and Status Checks

8 Data Tests

9 Common Questions and Operating Checks

9.1 Common Questions and Corrective Actions

9.2 Technical Support

10 Certification and Compliance

11 Revision History

1 Functional Description

SKL5010A and SKL5010B connect devices through a 60 GHz millimeter-wave link, replacing a short USB 2.0 cable. The USB tunnel connects a USB host to a USB device. UART, GPIO and I2C tunnel modes carry their corresponding signals and each require the appropriate firmware.

End A includes a controller that configures both ends. The USB 2.0 signaling rate is up to 480 Mbit/s. The LP full-duplex UART and bidirectional GPIO tunnels support up to 2.4 Mbit/s; the I2C interface supports up to 1 Mbit/s.

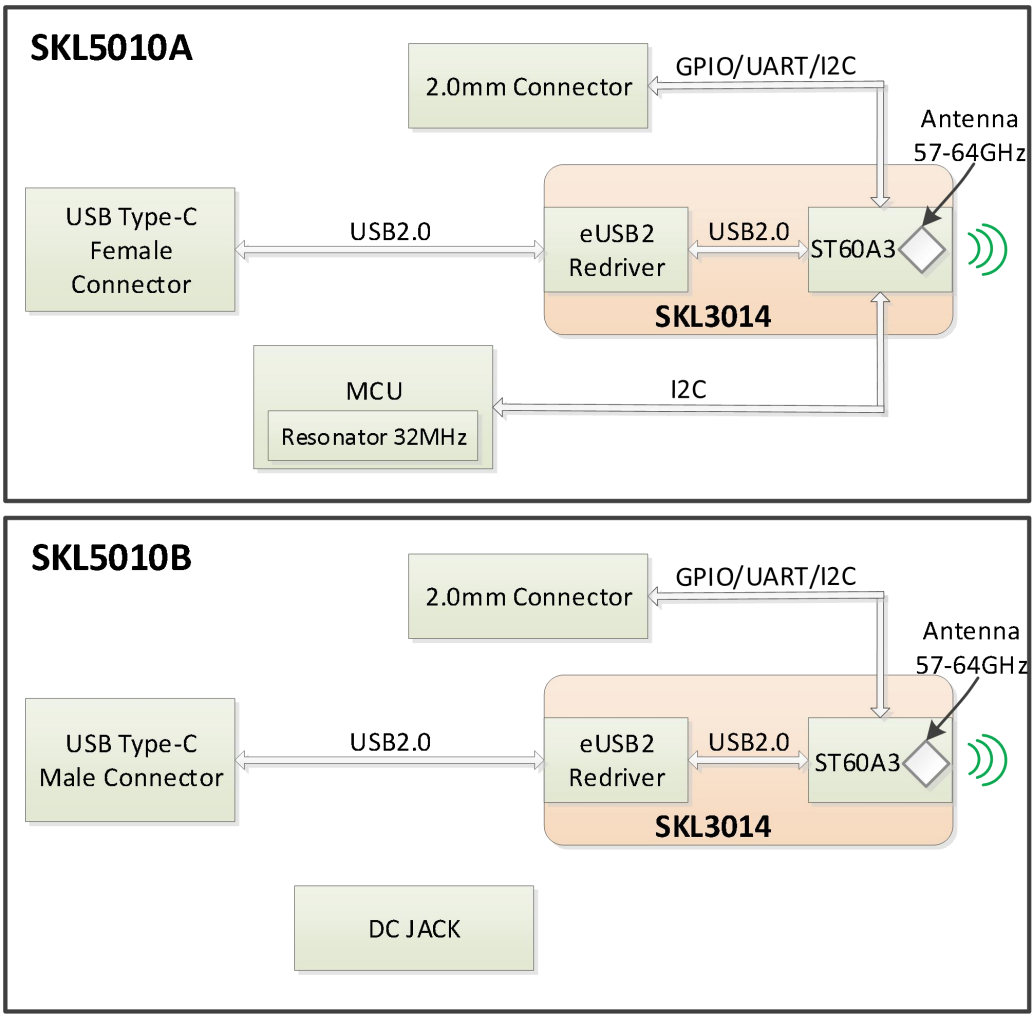

Figure 1. SKL5010A and SKL5010B functional block diagram

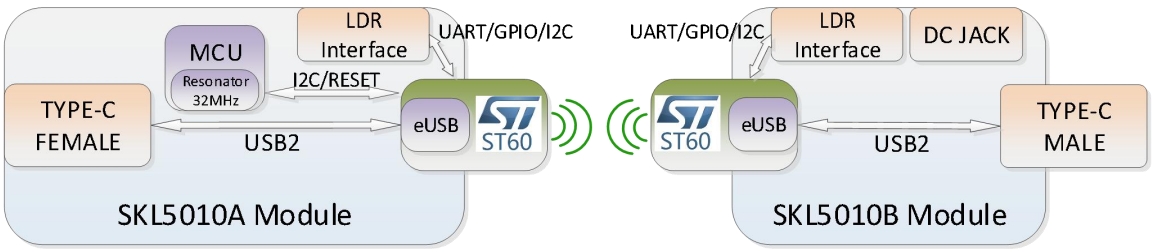

Figure 2. Paired-module connection diagram

2 Interface Definitions

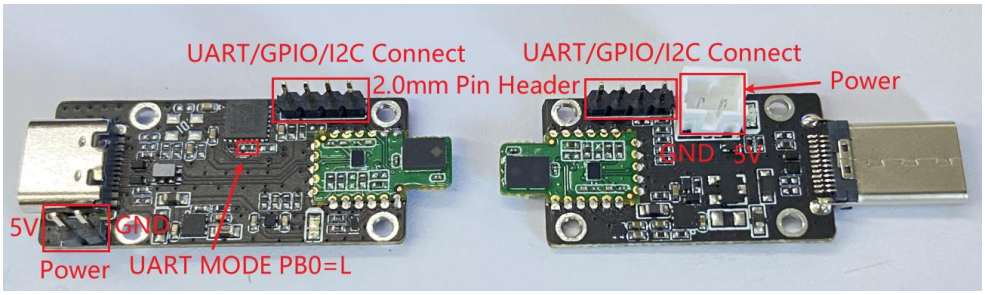

Figure 3. UART mode selection and external 5 V supply connection



Figure 4. Location of the 1.8 V auxiliary header

Table 1. Auxiliary Interface Definitions

Pin	Signal Name	Function
1	1V8	1.8 V supply.
2	GPIO0	UART RX / I2C SCL / GPIO tunneling, 1.8 V logic.
3	GPIO1	UART TX / I2C SDA / GPIO tunneling, 1.8 V logic.
4	GND	Ground.

3 Electrical Characteristics

Table 2 lists recommended supply conditions, typical input current and power consumption, and operating ambient temperature. For carrier frequency, see Table 3. Wire the external 5 V input separately from the 1.8 V auxiliary signals.

Table 2. Supply and Temperature Parameters

Symbol	Parameter	Min.	Typ.	Max.	Unit
V_{IN}	Input voltage	4.5	5	5.5	V
I_{IN}	Input current	-	42	-	mA
P	Total power consumption	-	0.21	-	W
T_A	Operating ambient temperature (SKL5010A/B)	-20	-	+85	°C

Table 3. RF parameters

Symbol	Parameter	Min.	Typ.	Max.	Unit
F_{OSC}	Carrier frequency	-	60.5	-	GHz

Check interface rates, installation conditions and power polarity at each end as described in the preceding sections.

4 Mode Configuration

PB0 high at end A selects the default USB mode; PB0 low selects a low-speed mode. For R13 and R32 positions, see Figure 5. Disconnect power before making adjustments and use the firmware corresponding to the required UART, GPIO or I2C tunnel.

The I2C tunnel supports Standard-mode, Fast-mode and Fast-mode Plus, with SCL clock frequencies of 100, 400 and 1000 kHz, respectively, selected by the supplied firmware. Target peripherals must not stretch SCL. Connect the GPIO-multiplexed I2C tunnel separately from the I2C bus used to configure the module.

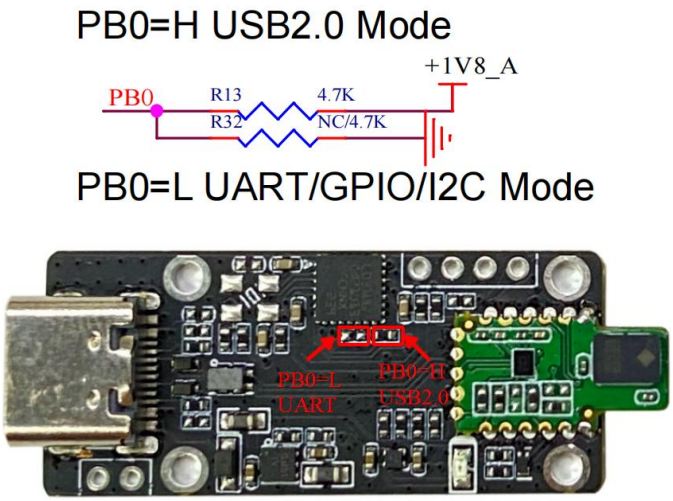

Figure 5. PB0 mode selection and pull-up/pull-down resistors

5 Communication Connections

5.1 USB Connection

(1) With power disconnected, check the module models, USB mode and antenna orientations. Connect end A to the USB host and end B to the USB device. Use a USB cable matching end A's connector; connect the device through end B's Type-C interface.

(2) Connect external 5 V to end B and check polarity and common ground. End A is powered by the host USB port. For the connection arrangement, see Figure 6.

(3) Place the antenna faces opposite each other with centers aligned. Use a relative orientation of 0° or 180° as shown in Figure 7. Use an initial spacing of approximately 20 mm and keep installation spacing below 60 mm. For mechanical integration, a spacing no greater than 30 mm and lateral offset no greater than 5 mm are recommended.

(4) Observe both indicators. Once the wireless link is established, check whether the host recognizes the USB device, then access files or perform normal operations appropriate to that device. If it is not recognized, follow the checks in Section 9.

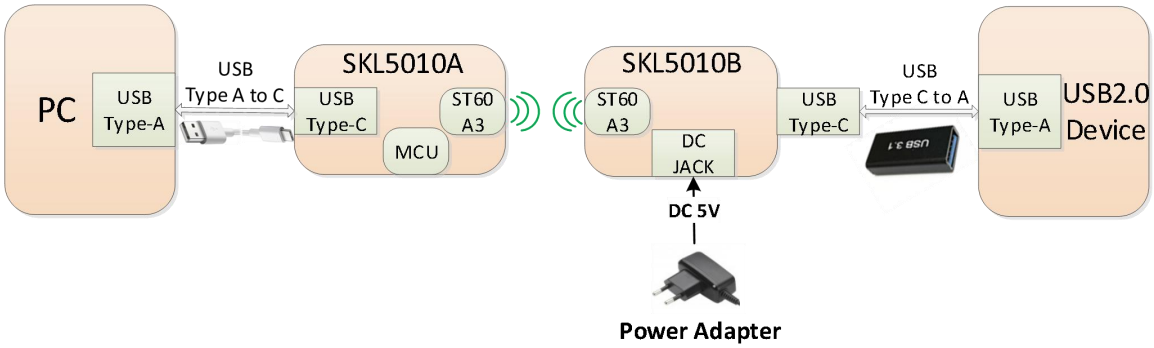

Figure 6. Paired connection between a USB host and USB device

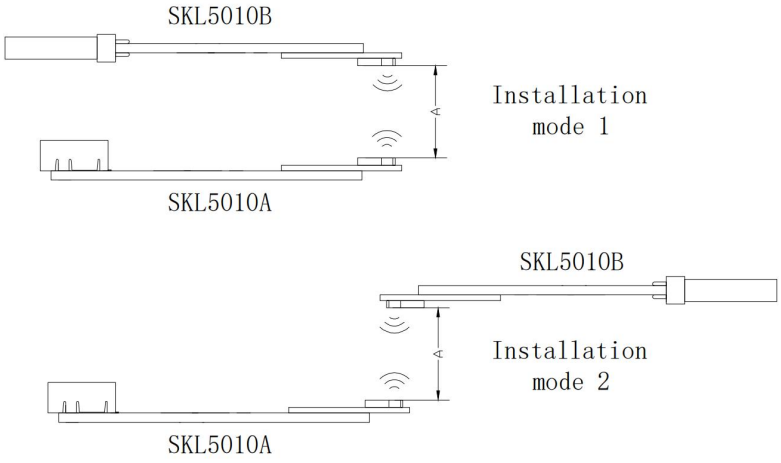

Figure 7. Opposing antenna faces and 0° / 180° mounting orientations

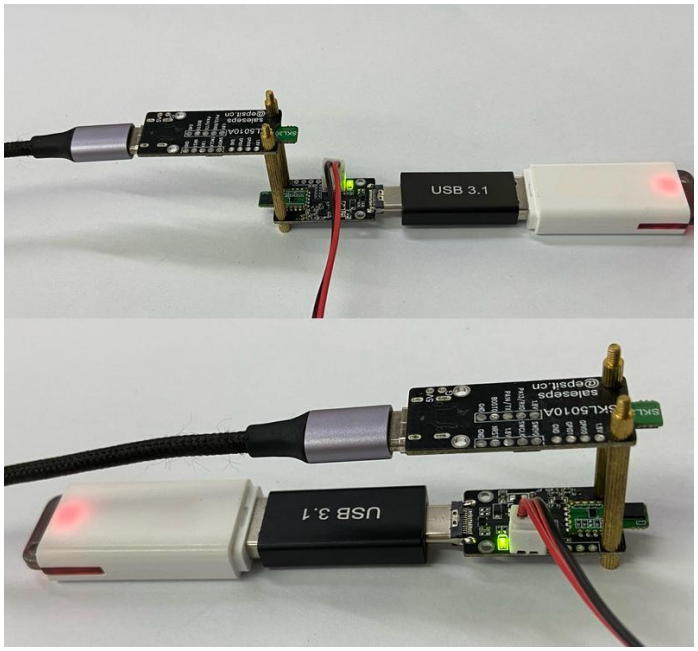

Figure 8. Example with end A connected to the host and end B to the device

5.2 Mobile Phone Connection Example

Connect the phone as a USB device to end B and connect end A to the computer. If the phone prompts for a USB function, select file transfer and grant permission. Once the computer recognizes the phone, access or copy files.



Figure 9. Selecting USB file-transfer mode on the phone

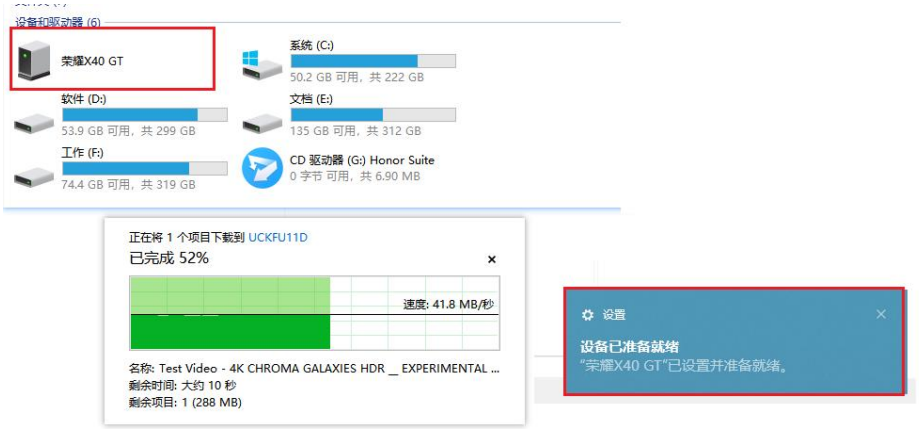

Figure 10. Computer recognition of the phone and file-copy example

The illustration in Figure 10 shows computer recognition of the phone and file-copy operations. Record the device, file size, copy duration, average rate and verification result during testing.

5.3 UART Connection and Debugging

UART and GPIO rates apply to the low-power (LP) full-duplex UART tunnel and bidirectional GPIO tunnel, respectively. At 2.4 Mbit/s, the application must provide data-error detection. Without error detection, use a rate no higher than 1.6 Mbit/s.

The 6 Mbit/s rate applies to the ST60A3 LP half-duplex UART tunnel or single-channel unidirectional GPIO tunnel. Use the corresponding tunnel firmware and observe its specified signal direction and transmit/receive timing. Configure bidirectional GPIO, full-duplex UART, unidirectional GPIO and half-duplex UART separately; do not interchange their rate limits.

As shown in Figure 3, set PB0 low and load the UART firmware. Supply 5 V through the 2.0 mm-pitch power connector, checking pin orientation and polarity before wiring. For the auxiliary header location, see Figure 4; for pin definitions, see Table 1.

In UART mode, GPIO0 is the module RX input and GPIO1 is its TX output. Connect the USB-to-UART adapter TX to GPIO0, RX to GPIO1, and connect GND. Set the adapter to 1.8 V logic. Do not connect 3.3 V or 5 V logic directly.

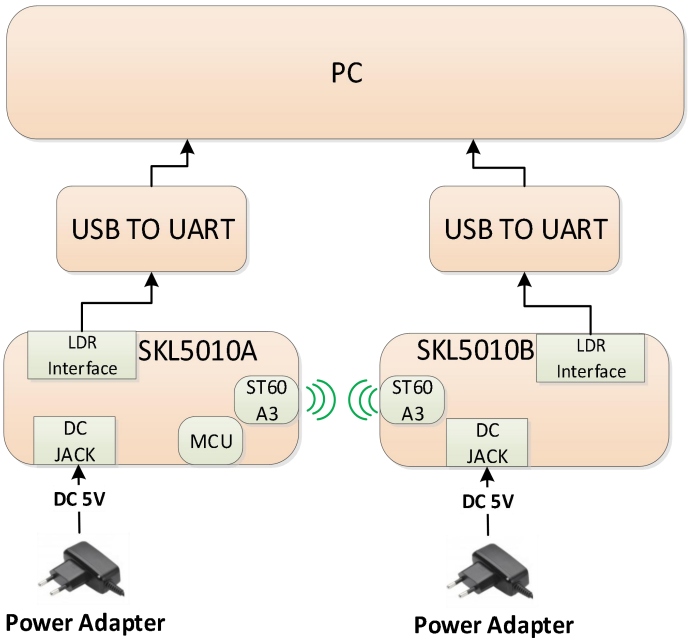

Figure 11. USB-to-UART adapters connected to the two modules

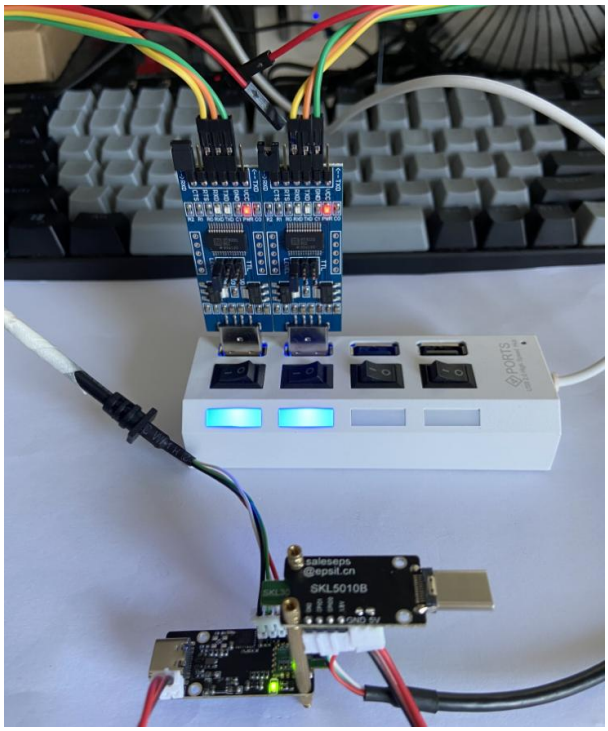

Figure 12. Physical UART debugging setup

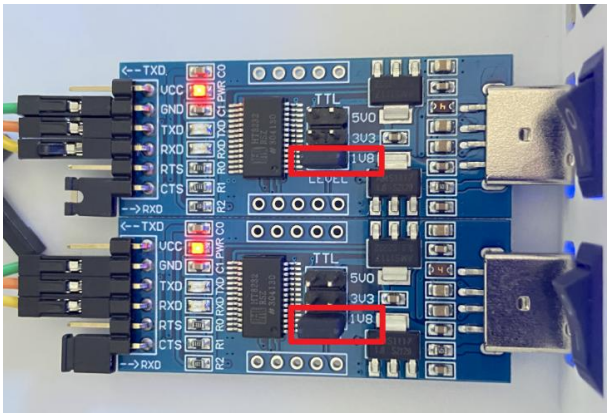

Figure 13. Selecting 1.8 V logic on the USB-to-UART adapter

5.3.1 Debugging Procedure

(1) With power disconnected, complete the power, crossed UART and common-ground connections at both ends. Verify that both adapters use 1.8 V logic. Align the antennas, apply power and wait for the wireless link.

(2) Identify both COM port numbers on the computer, open the corresponding ports, and select matching baud rates, data bits, stop bits and parity. In Figure 14, use 115200 bit/s, 8 data bits, 1 stop bit and no parity for this debugging example.

(3) Send known data from one end and check reception at the other, then repeat in the reverse direction. In Figure 14, transmit the string 1234 every 1000 ms. Select COM ports and transmission intervals to suit the setup.



Figure 14. UART tool settings and transmit/receive examples at both ends

5.4 GPIO and I2C Connections

Power, logic levels and header positions for GPIO and I2C modes are the same as in Section 5.3. Set PB0 at end A low and use the firmware and configuration corresponding to the required tunnel.

In GPIO mode, set GPIO0/GPIO1 directions according to the supplied configuration. Apply a known logic sequence and verify the corresponding changes at the other end. The I2C tunnel uses GPIO0 as SCL and GPIO1 as SDA, with 1.8 V logic. Connect the I2C devices according to the supplied configuration and perform address-access and read/write tests.

6 Assembly Instructions

For PCB and connector dimensions, see Figure 15. Reserve installation space according to the dimensions, connector orientations and antenna locations shown. Install the antenna faces opposite each other and maintain the orientation and spacing specified in Section 5.1.

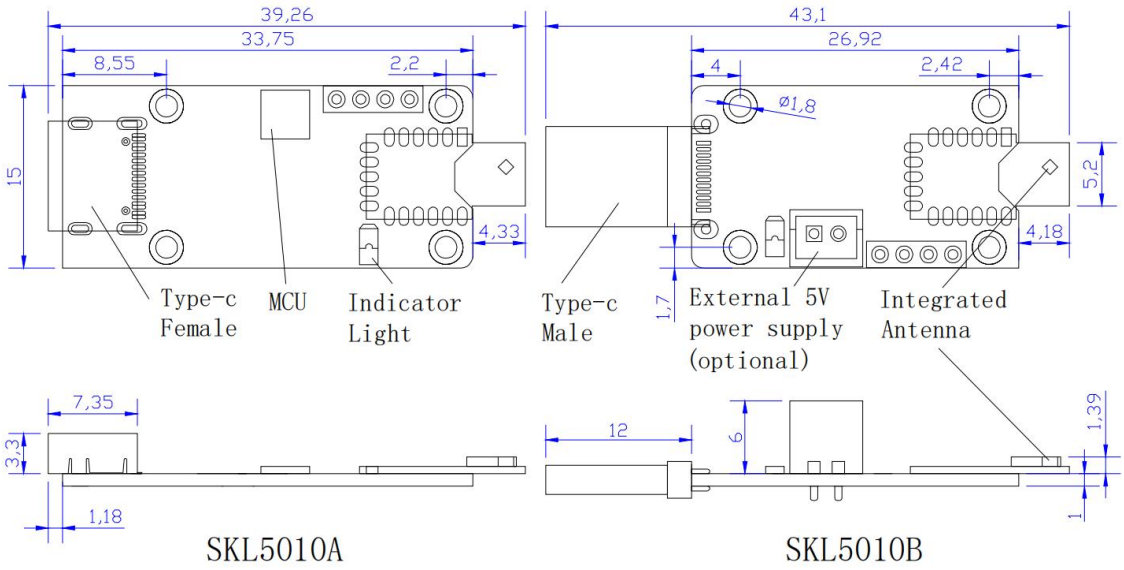

Figure 15. SKL5010A/B PCB and installation dimensions (unit: mm)

Keep the antenna propagation path clear. Provide a nonmetallic window at the corresponding position in any metal enclosure, using plastic or another material suitable for millimeter-wave transmission. After installing the final enclosure, repeat the tests in Section 8 with the actual window material, thickness, installation spacing and operating temperature.

7 Power-Up and Operation

7.1 Power and Logic-Level Checks

The module requires a 5 V supply. For the recommended range, see Table 2. Host-side end A is normally powered by the host USB port; device-side end B uses external 5 V. The auxiliary-header 1V8 pin is a 1.8 V supply signal, and GPIO0/GPIO1 use 1.8 V logic. Do not connect them to the 5 V input or to 3.3 V/5 V signals without level conversion.

End B supplies VBUS to the connected USB device after the wireless link is established. Check module power, wireless connection and USB enumeration in that order. Use either PH2.0 external power or device-side Type-C power, never both simultaneously.

7.2 Initial Power-Up and Status Checks

Table 4. Green Indicator States

State	Meaning
Off	Check module power
Dim	Module powered; link not yet established
Bright and flashing	Establishing link
Bright, continuously lit	Wireless link established

Both ends have a green indicator. End B powers the connected USB device after the wireless link is established. Once both indicators remain brightly lit, check the device name, enumerated USB speed and device operation on the host.

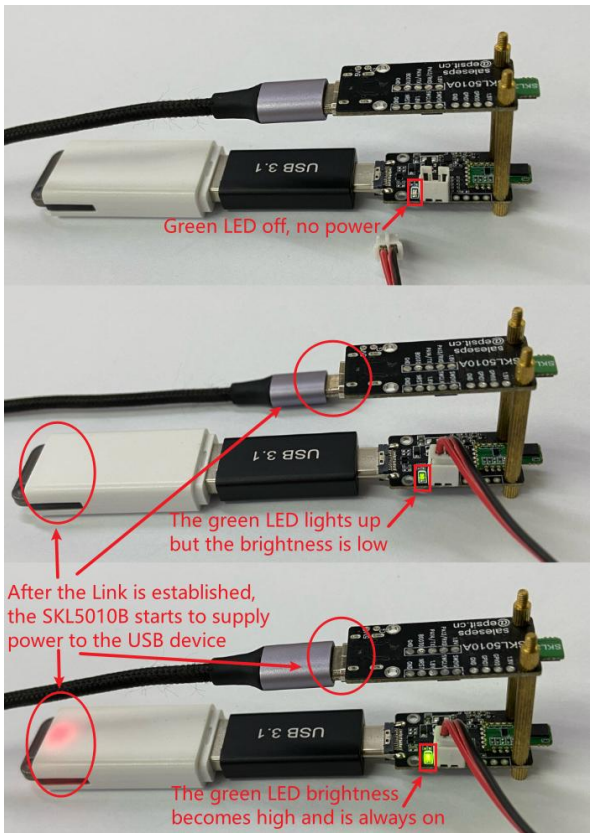

Figure 16. Example power and connection indicator states

8 Data Tests

(1) Connect the same USB device directly to the host. Confirm normal device and driver operation, and record the device name, enumerated speed and operations performed.

(2) Replace the direct connection with the A/B wireless link. For storage devices, read and write a fixed file and verify its size and checksum. For cameras, run continuous image acquisition.

(3) Record the amount of data read and written, duration, average application rate, errors and reconnections. Compare with the direct connection.

(4) Power-cycle each end separately and check recovery of the wireless link, end-B device power, USB enumeration and data transfer.

(5) Repeat the tests at the final spacing, relative orientation, enclosure window and actual operating temperature. Save supply voltage, temperature, window material and thickness, offset and results.

9 Common Questions and Operating Checks

9.1 Common Questions and Corrective Actions

(1) Indicator off: check the input supply, voltage, connector polarity and cables. Do not interconnect the external end-B supply and USB-device power input.

(2) Persistently dim or flashing: check the paired models, interface mode and firmware. Check antenna orientation, spacing, offset and obstructions. Metal structures require a nonmetallic window.

(3) Wireless link established but USB device not recognized: confirm end A connects to the host and end B to the device. Check end-B power, USB data cables, phone authorization and host device status, then repeat enumeration.

(4) No UART reception or incorrect data: check the UART firmware and PB0 low setting, 1.8 V logic, crossed TX/RX connections, common ground and matching port settings. Verify short known messages in both directions before debugging the application.

9.2 Technical Support

When contacting technical support, provide the product model and revision, connections and settings at both ends, power-supply conditions, indicator states, symptoms and steps to reproduce the issue. Include wiring and assembly photographs, test settings and recorded results.

10 Certification and Compliance

Certification and compliance information for SKL5010A / SKL5010B is listed below.

Table 5. Certification and Compliance Information

Region / Item	Applicable Models	Certificate or Report No.	Issue Date
United States FCC equipment authorization	SKL5010A / SKL5010B	FCC ID: 2AYEX-SKL5010	2023-12-14
European Union CE conformity assessment	SKL5010A / SKL5010B	MRT202309RSH20	2023-12-12

The FCC equipment authorization covers FCC Part 15C; RF testing is based on FCC Part 15.255. The associated RF report is 2309RSU048-U1 V02 (2023-12-12); the RF exposure assessment report is 2309RSU048-U2 (2023-12-04).

The CE conformity documentation lists the following assessment standards:

(1) RF: EN 305 550-2 V1.2.1 (2014-10).

(2) RF exposure: EN 62479:2010.

(3) EMC: EN 301 489-1 V2.2.3 (2019-11) and EN 301 489-3 V2.3.2 (2023-01).

(4) Safety: EN IEC 62368-1:2020/A11:2020.

This transmitter must not be co-located or operated in conjunction with any other antenna or transmitter. Follow the supplied antenna installation instructions and transmitter operating conditions during installation and use to meet RF exposure requirements.

11 Revision History

Date	Revision	Description of Changes
2024-10-30	V1.0	Revised from UserManual_SKL5010.
2026-11-04	V1.5	(1) Organized A/B power, firmware and mode selection, interface levels and LED states; retained all operating and dimensional drawings. (2) Expanded USB connections, phone examples, data-transfer and reconnection tests; added UART, GPIO and I2C procedures. (3) Added enclosure-window and installation verification; expanded USB, UART and wireless troubleshooting; checked interface and figure/table references. (4) Equalized the Min., Typ. and Max. columns while retaining all values, conditions, units, font sizes and standard row spacing. (5) Arranged revisions from oldest to newest, retaining the original dates, revision numbers and historical changes. (6) Distinguished ST60A3 low-speed tunnel configurations: specified 2.4 Mbit/s for LP full-duplex UART and bidirectional GPIO, added error-detection requirements and the applicable 1.6 Mbit/s condition, and standardized tunnel terminology. Added I2C tunnel bus rates and the requirement that target peripherals must not stretch SCL. (7) Standardized section names, order and content allocation using the common outline, retaining technical explanations and illustrations; rebuilt the contents, figure/table numbering and internal references. Moved initial power-up under Power-Up and Operation; standardized Common Questions and Usage Checks and added the information required for technical support. Added applicable model-specific certification and compliance information immediately before Revision History. (8) Renumbered figures to match the manually adjusted image order; updated text references and caption bookmarks while retaining image sizes and positions. (9) Prepared and checked this English edition against the current Chinese edition, preserving numbered items, parameters, illustrations, commands and operating instructions.