V1.5 · 2026-11-05

SK-RF CO.,Ltd

USER MANUAL

SK202 Module User Manual

Installation and Operation of Contactless Gigabit Ethernet Connections

Document Type	User Manual
Applicable Product	SK202A / SK202B (including AC/BC and AI/BI configurations)
Document Version	V1.5
Release Date	2026-11-05

Document Summary: Describes the SK202 module functions, installation and wiring, link-speed configuration, network testing and troubleshooting for installation, commissioning and maintenance personnel.

Contents

1 Functional Description

2 Interface Definitions

3 Electrical Characteristics

4 Mode Configuration

4.1 Link-Speed Mismatch between Devices with Different Capabilities

4.2 Matching the Port Speed at the Higher-Speed Device

4.3 Matching Port Speeds Using a Switch

4.4 Status Indicators

5 Communication Connections

6 Assembly Instructions

6.1 Assembly Preparation

6.2 Mechanical Assembly

6.2.1 Antenna Keep-Out Area

6.2.2 Area Surrounding the Antennas

6.2.3 Metal-Enclosure Window and Clearances

6.2.4 Assembly Checks

7 Power-Up and Operation

7.1 Initial Power-Up

8 Data Tests

8.1 Test Preparation and Link-Speed Checks

8.2 Reachability and TCP Transfer Tests

8.3 UDP Transfer and Offered-Load Selection

8.4 Extended Tests and Result Recording

8.5 Wired Baseline and Assembly Verification

8.6 Functional and Application Verification

9 Common Questions and Operating Checks

9.1 Common Questions and Corrective Actions

9.2 Technical Support

10 Certification and Compliance

10.1 Standard-Temperature Certification Information

10.2 Industrial-Temperature Certification and Class A Statement

10.3 FCC Part 15 Class B Statement

10.4 RF Exposure Warning

11 Revision History

1 Functional Description

SK202 provides a contactless connection between two Ethernet devices over a 60 GHz millimeter-wave wireless link. SK202A and SK202B use complementary horizontally and vertically polarized channels to support bidirectional full-duplex transmission when installed as a pair. Each module connects to its local Ethernet device through RJ45 and receives DC power separately.

The Ethernet interface supports 10/100/1000 Mbit/s. Each module negotiates independently with its local device. Both ports must operate at the same link speed.

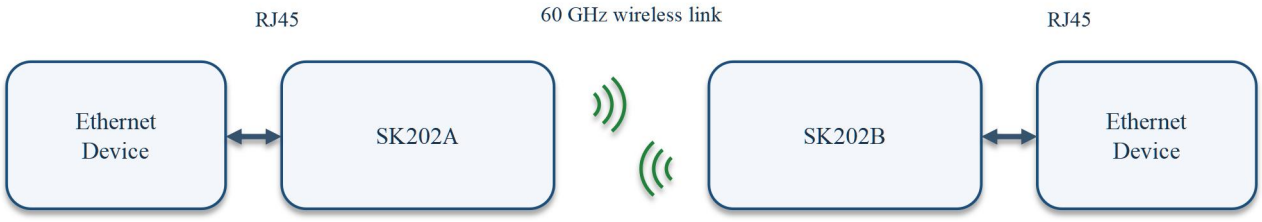

Independently powered modules; opposing, aligned antenna faces; bidirectional full-duplex communication

Figure 1. Typical SK202 system connection

2 Interface Definitions

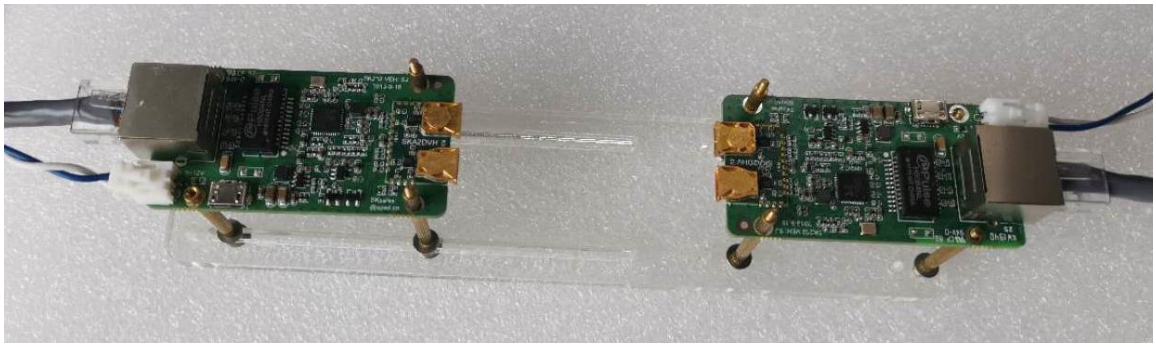

Figure 2. SK202A/B Paired Assembly and Interface Locations

Table 1. Interfaces and Wiring

Interface / Pin	Description
RJ45	Connects to the local computer, switch or other Ethernet device
DC JACK	DC power input
USB MICRO-B	DC power input only

The DC JACK and USB MICRO-B power paths are internally connected. Use one power input per module; do not connect two supplies simultaneously. Check supply polarity before connection.

3 Electrical Characteristics

Table 2. Power Supply and Installation Conditions

Item	Description
Input voltage	4.4–16 V; 12 V recommended
Input current	50 mA typical, 80 mA maximum; 12 V supply, Ethernet active
Typical total power consumption	0.6 W
Operating ambient temperature	Standard configuration: 0 to +70 °C; industrial configuration: −40 to +85 °C
Installation	Opposing antenna faces with centers aligned; independently powered modules
Recommended initial spacing	Approximately 20 mm
Maximum junction temperature	+125 °C
Storage temperature	−40～+105 °C

Table 3. Operating Distance under Specified Temperature Conditions

Symbol	Parameter	Min.	Typ.	Max.	Unit
L_{C1}	Operating distance at +50 °C, standard configuration	1.0	2.0	4.5	cm
L_{C2}	Operating distance at 0 °C, standard configuration	1.0	2.0	5.5	cm
L_I	Operating distance at +85 °C, industrial configuration	1.0	2.0	3.5	cm

Select the gap according to the supplied module temperature grade and the temperature conditions in the table.

Table 4. Carrier Frequency

Symbol	Parameter	Min.	Typ.	Max.	Unit
F_{OSC}	Carrier frequency	60.3	60.4	60.5	GHz

4 Mode Configuration

The Ethernet PHY in SK202 always operates with auto-negotiation enabled and supports 10/100/1000 Mbit/s. Each module independently negotiates with its connected local device; the two negotiations take place concurrently. For SK202A and SK202B to communicate correctly, both local links must operate at the same actual speed.

4.1 Link-Speed Mismatch between Devices with Different Capabilities

For example, if the computer supports 10/100/1000 Mbit/s and the camera supports only 10/100 Mbit/s, the computer-side link typically negotiates 1000 Mbit/s while the camera-side link negotiates 100 Mbit/s. Both RJ45 ports may establish local links, but the speed mismatch prevents correct end-to-end data transfer.

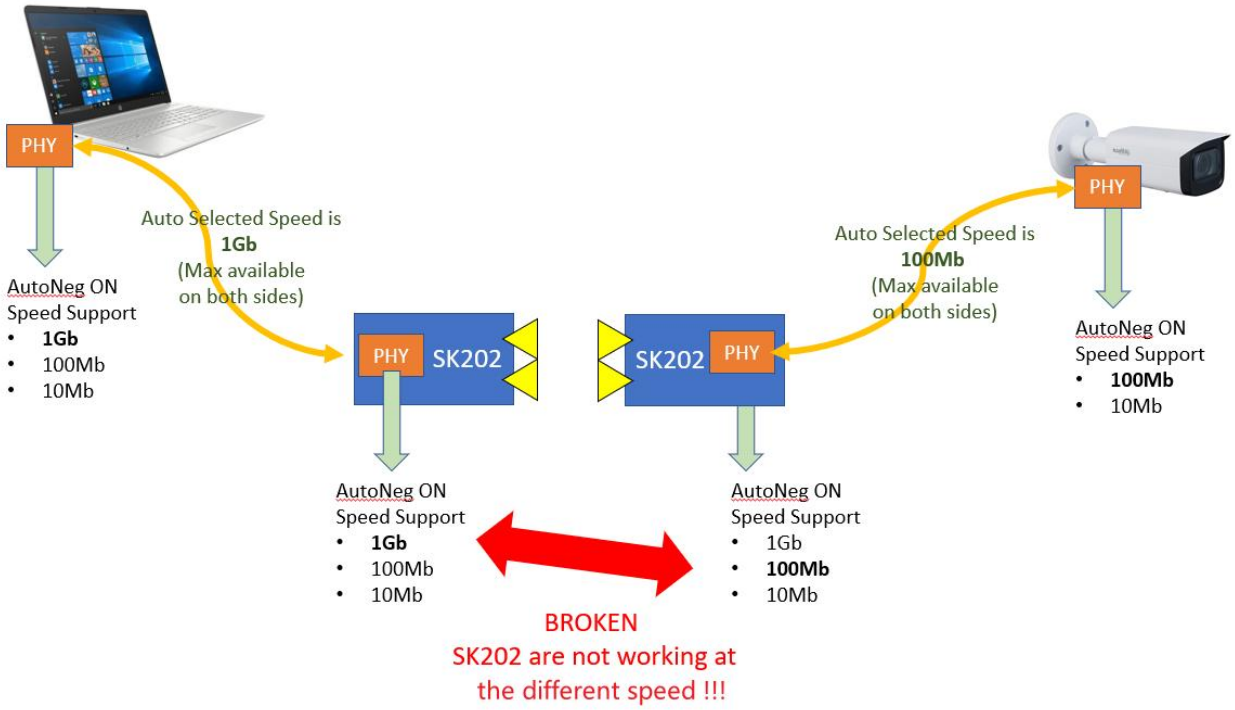

Figure 3. Independent Auto-Negotiation Resulting in a Link-Speed Mismatch

In the illustration, AutoNeg ON means auto-negotiation is enabled, Speed Support lists the supported port speeds, and Auto Selected Speed shows the negotiated speed: 1 Gbit/s on the left and 100 Mbit/s on the right. The red BROKEN indication identifies the speed mismatch between the modules and the resulting failure to establish end-to-end communication.

4.2 Matching the Port Speed at the Higher-Speed Device

When the devices advertise different maximum speeds, configure the higher-speed device to use the same speed as the slower device. For a 100 Mbit/s camera, limit the maximum advertised speed to 100 Mbit/s in the computer network adapter advanced settings or the switch port settings.

If the network adapter offers only fixed-speed settings, disable automatic speed selection on the computer and select 100 Mbit/s as illustrated. Check the adapter duplex setting, then reconnect and verify the actual speed and duplex at both ends. SK202 itself remains in auto-negotiation mode.

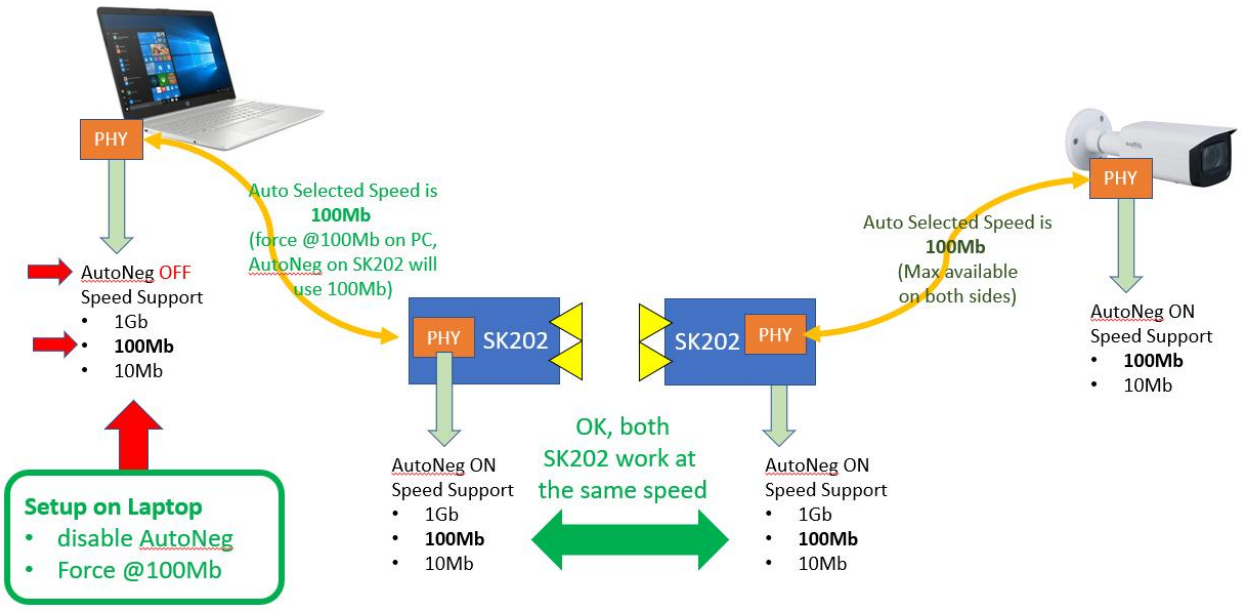

Figure 4. Setting the Computer Port to 100 Mbit/s to Match Both Links

AutoNeg OFF and Force @100Mb indicate a fixed 100 Mbit/s setting on the computer; the module remains at AutoNeg ON. After configuration, both SK202 local Ethernet links operate at 100 Mbit/s. The green OK indication shows that the speeds match.

Recheck the link speed at both ends, perform data-transfer tests in both directions, and save the port configuration.

4.3 Matching Port Speeds Using a Switch

Alternatively, insert a switch with the same speed as the slower device between the faster device and its local SK202. For example, with a 100 Mbit/s camera, insert a 100 Mbit/s switch on the computer side so that the computer-to-switch, switch-to-SK202A and camera-to-SK202B links all operate at 100 Mbit/s.

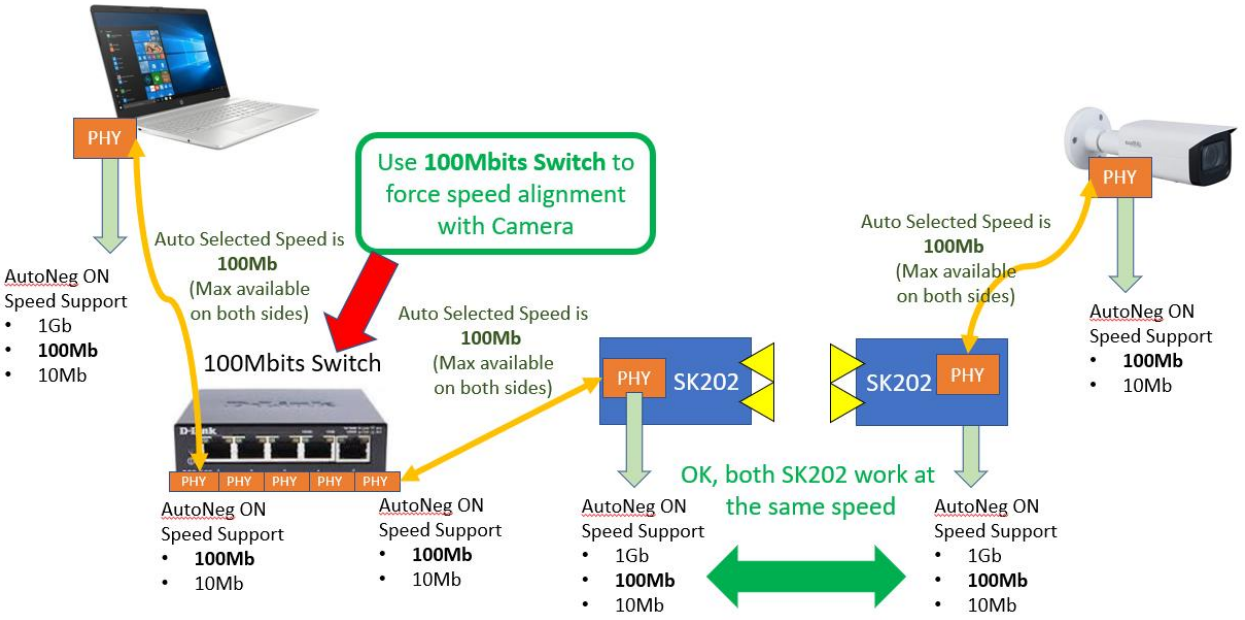

Figure 5. Matching Both Auto-Negotiation Results Using a 100 Mbit/s Switch

The 100Mbits Switch label identifies a 100 Mbit/s switch. Both end devices and SK202 modules may retain auto-negotiation; the switch limits the faster-side negotiation so that both modules operate at the same speed. Read the actual port speeds after connection and verify communication in both directions.

4.4 Status Indicators

Table 5. RJ45 Indicators and Link Speeds

Link Speed	Indicator State
1000 Mbit/s	Yellow indicator flashes
100 Mbit/s	Green indicator flashes
10 Mbit/s	Both green and yellow indicators flash

Verify the actual negotiated speed against the port status reported by the connected device.

5 Communication Connections

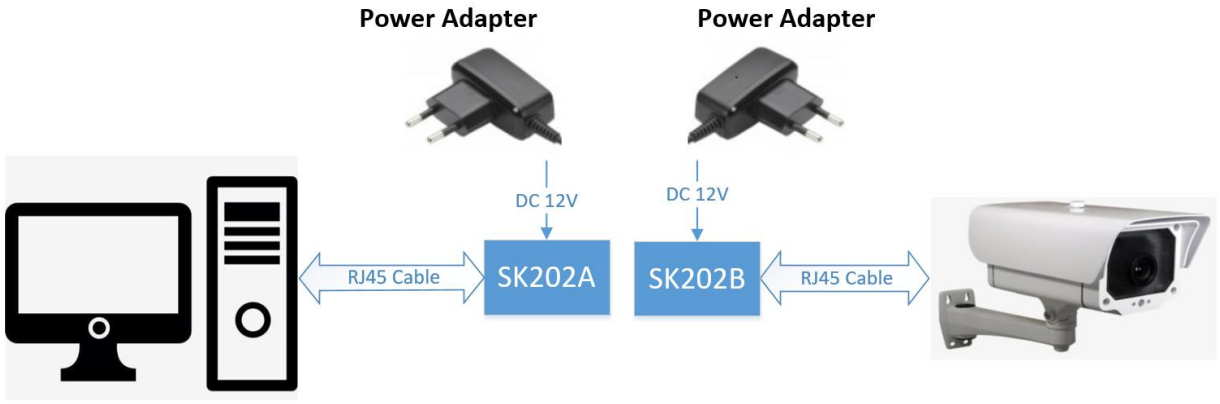

Figure 6. Connecting a Computer and an IP Camera through SK202

Connect the computer to SK202A and the IP camera or its network device to SK202B using RJ45 Ethernet cables. Power the modules separately. Power Adapter identifies the supply, DC 12V identifies the 12 V DC input, and RJ45 Cable identifies the Ethernet cable.

Each local Ethernet device and its connected module must negotiate the same speed as the opposite-side link. For example, if the computer-to-SK202A link operates at 1000 Mbit/s, the opposite device-to-SK202B link must also operate at 1000 Mbit/s to establish Gigabit Ethernet communication.

If the opposite network device supports only 100 Mbit/s, its link to SK202B negotiates 100 Mbit/s. If the computer-side link remains at 1000 Mbit/s, the mismatch prevents correct end-to-end communication. Match both speeds using the methods in Chapter 4.

Select Ethernet cables suitable for the actual 10, 100 or 1000 Mbit/s link speed; use Cat5e or better for Gigabit testing. Use SK202A and SK202B as a pair with the gold-colored horn-antenna regions facing each other and aligned. The connection example uses an antenna gap of approximately 30 mm. During commissioning, select the actual gap using the temperature and operating-distance conditions in Chapter 3.

6 Assembly Instructions

6.1 Assembly Preparation

Prepare SK202A and SK202B, two Cat5e or better Ethernet cables, suitable DC supplies and mounting brackets. For testing, use two computers or one computer and the target Ethernet device.

(1) Disconnect power at both ends. Inspect the modules, connectors, cables and mounting holes for damage.

(2) Position the antenna faces opposite each other with their centers aligned. Set the initial commissioning gap to approximately 20 mm.

(3) Secure the RJ45 and power cables so that cable tension cannot alter antenna alignment.

(4) For a metal enclosure, provide nonmetallic windows directly in front of the antennas at both ends. Keep the propagation path free of metal obstructions.

6.2 Mechanical Assembly

6.2.1 Antenna Keep-Out Area

Keep metal obstacles out of the green Keep Out Area (KOA) shown in the drawing to allow millimeter-wave propagation between the modules.

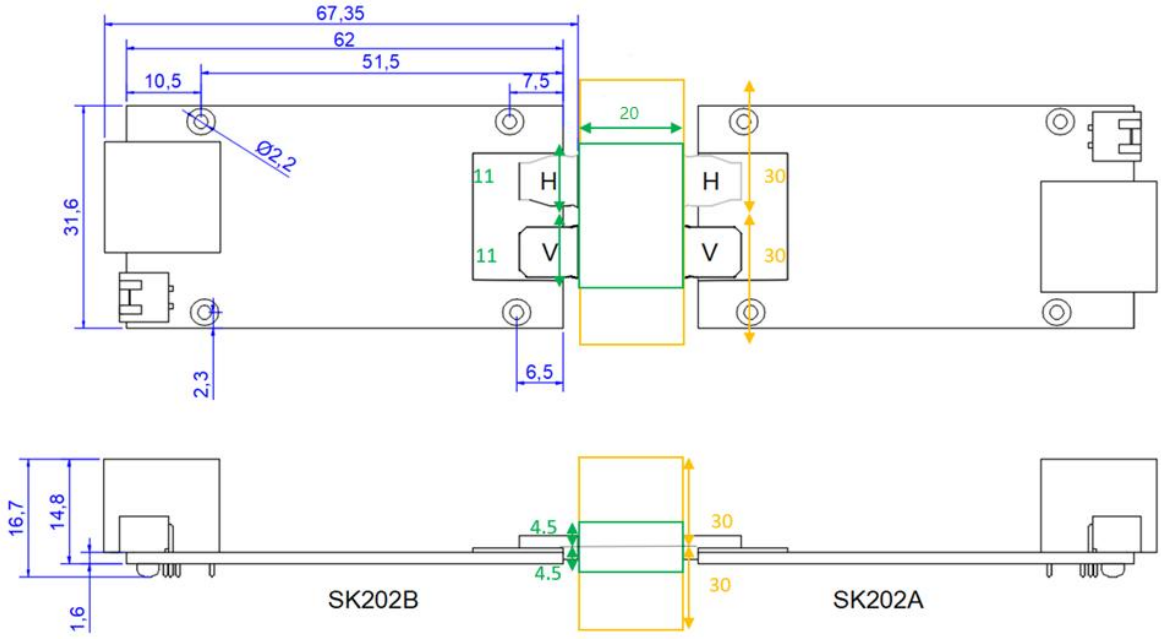

Figure 7. SK202 installation dimensions and antenna clearance (unit: mm)

The green keep-out area is a rectangular volume 22 mm wide and 9 mm high. Its length along the propagation direction equals the actual antenna-to-antenna gap. Connection examples typically use approximately 30 mm; this assembly drawing shows 20 mm. Set the volume length to match the actual assembly gap.

6.2.2 Area Surrounding the Antennas

The orange Safe Area identifies the region surrounding the antennas where objects may affect millimeter-wave propagation. It is a rectangular volume 60 mm wide and 60 mm high, extending along the propagation direction over the actual antenna gap; the drawing uses 20 mm.

If electronic components, metal parts, fasteners, screws, metallic coatings or other reflective surfaces lie within the orange region, assess their effect on the propagation path and verify communication in the actual assembly.

6.2.3 Metal-Enclosure Window and Clearances

If a metal enclosure surrounds the modules, provide a window along the antenna propagation direction to allow millimeter waves to pass. The opening may be covered with ABS or another nonmetallic material suitable for millimeter-wave transmission to meet enclosure sealing requirements.

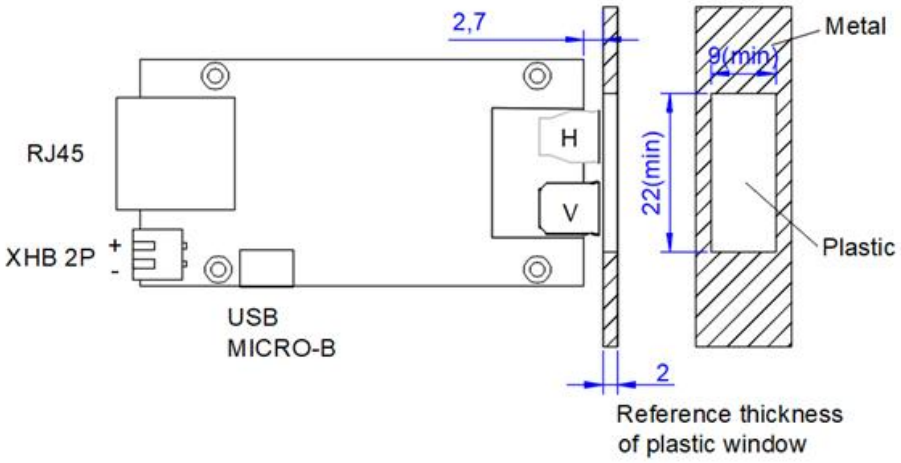

Figure 8. Metal-Enclosure Window and PCB Position (unit: mm)

The reference enclosure-to-PCB distance is approximately 2.7 mm, providing approximately 0.8 mm clearance between the horn-antenna body and the ABS housing.

The minimum window dimensions are 22 mm × 9 mm, centered on the two horn antennas. The opening may be enlarged to suit the enclosure. The reference plastic-window thickness shown is 2 mm.

If the enclosure-to-PCB distance exceeds 2.7 mm, adjust the window dimensions to prevent reflections from the opening edges or metal enclosure from affecting communication. Test the completed assembly using its actual window material, thickness and antenna gap.

6.2.4 Assembly Checks

Before securing the modules, check antenna center alignment, the gap, metal obstructions in the green area, and components and fasteners in the orange area. Retest network communication after securing the assembly; ensure that supply and Ethernet cables cannot pull the modules out of position.

7 Power-Up and Operation

7.1 Initial Power-Up

(1) Recheck the DC JACK or USB MICRO-B power wiring and the antenna positions. A 12 V supply is recommended; see the permitted input range in Chapter 3.

(2) Apply power to both ends separately and observe the port status on the local computer or switch.

(3) Read the actual link speed on both connected devices and confirm that both operate at the same speed: 10, 100 or 1000 Mbit/s.

(4) Perform bidirectional communication tests using the intended application or the method in Section 8. Secure the assembly after confirming stable communication.

8 Data Tests

8.1 Test Preparation and Link-Speed Checks

Connect the two computers to the paired SK202 modules as described under Communication Connections. Set Computer A to 192.168.10.2 and Computer B to 192.168.10.3, both with subnet mask 255.255.255.0. Use addresses not already in use on site; no gateway is required for an isolated local test.

Use SK202A and SK202B as a pair, power each separately, and keep the horn antennas facing each other and aligned.

Install the same version of iperf3 on both computers. Select the wired adapters connected to the modules and prevent test traffic from using Wi-Fi or other ports. Allow ping and iperf3 through the firewall for the test network. For Gigabit connections, use suitable cables with all four pairs connected.

Read the actual link speed and duplex status at both ends, select a speed supported by both devices, and complete a wired baseline test. Record the module, firmware, mode, network adapter, cable and software versions.

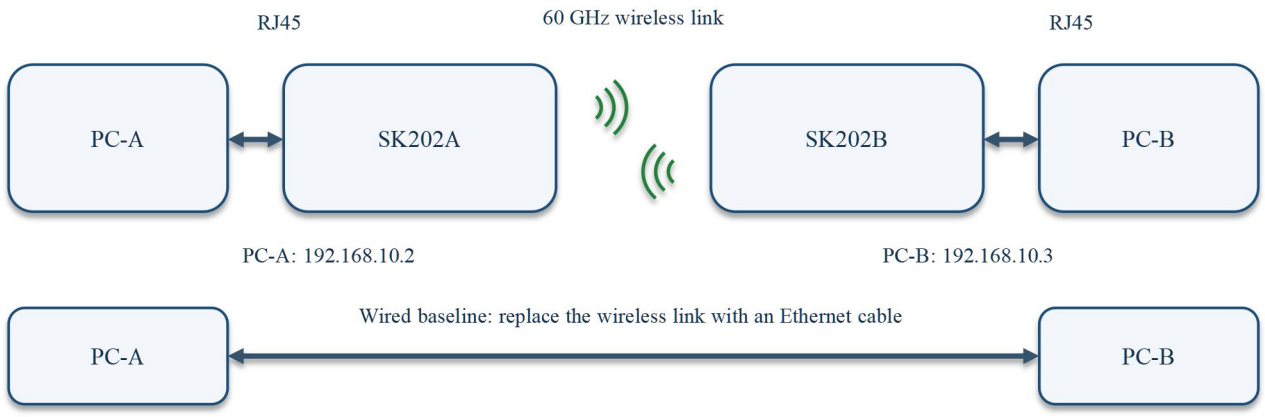

Figure 9. SK202 two-computer test connection and wired baseline

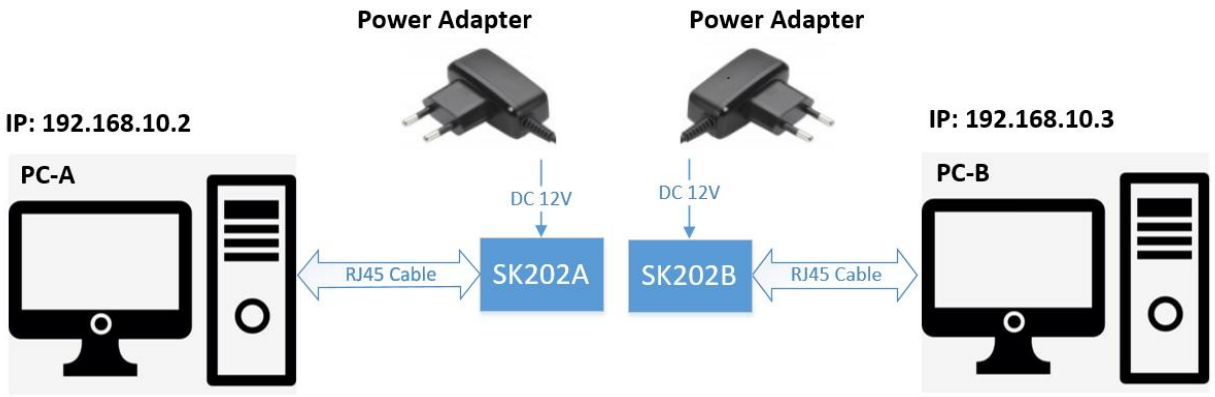

Figure 10. Two-Computer iperf3 Test Connection

In Figure 10, computer A is the server and computer B is the client. Power the modules separately and set both network adapters to the same link speed. All TCP and UDP commands in this section run on B; -R selects reverse transfer.

8.2 Reachability and TCP Transfer Tests

Check B from Computer A, then check A from Computer B:

```
ping -S 192.168.10.2 192.168.10.3 -n 20
ping -S 192.168.10.3 192.168.10.2 -n 20
```

Confirm that each direction receives 20 valid replies from the remote computer with no packet loss. Local errors such as "Destination host unreachable" or "General failure" are not remote replies. Record the maximum, minimum and average round-trip times. Use ping to check network reachability; check industrial cyclic data and I/O states separately.

Start the server on Computer A and leave its window open:

```
iperf3 -s -B 192.168.10.2
```

On Computer B, run the forward and reverse TCP tests in sequence. Each test runs for 60 seconds and reports once per second:

```
iperf3 -c 192.168.10.2 -B 192.168.10.3 -t 60 -i 1
iperf3 -c 192.168.10.2 -B 192.168.10.3 -t 60 -i 1 -R
```

The first command transfers data from B to A; the command with -R transfers data from A to B. The server remains on A. Run these tests sequentially, rather than simultaneously. Record the receiver summary rate, per-second variations and Retr retransmission count, where supported, and observe the indicators and link state.

8.3 UDP Transfer and Offered-Load Selection

Keep the server running on Computer A. On Computer B, run the following UDP tests separately:

```
iperf3 -c 192.168.10.2 -B 192.168.10.3 -u -b 80M -l 1400 -t 60 -i 1
iperf3 -c 192.168.10.2 -B 192.168.10.3 -u -b 80M -l 1400 -t 60 -i 1 -R
```

Use MTU 1500 for the baseline test. This example uses an offered load of 80 Mbit/s, a 1400-byte UDP payload and a duration of 60 seconds. Choose the initial load for the actual port speed, increase it only after the preceding step is stable, and stop when the application requirement is met. Suggested test loads are:

(1) 10 Mbit/s link: start at 5M, then test 8M. Do not use the 80M or 100M offered load in this example.

(2) 100 Mbit/s link: start at 50M, then test 80M and 100M.

(3) 1000 Mbit/s link: start at 100M, then test 500M, 800M and 1000M.

Read the receiver statistics on A for the forward test and on B for the reverse test. Record the receiver rate, Lost/Total Datagrams, packet loss percentage and Jitter. For the baseline check, aim for a receiver rate close to the offered load with zero packet loss. The -b option specifies offered load, not measured throughput. Select the load using the lower actual link capacity of the two ends and the wired baseline.

```
- - - - - - - - - - - - - - - - - - - - - - - - -
[ ID] Interval           Transfer     Bandwidth       Jitter    Lost/Total Datagrams
[  5]   0.00-100.00 sec  0.00 Bytes  0.00 bits/sec  0.099 ms  0/184761 (0%)
-----------------------------------------------------------
```

Figure 11. Server Output Fields

```
- - - - - - - - - - - - - - - - - - - - - - - - -
[ ID] Interval           Transfer     Bandwidth       Jitter    Lost/Total Datagrams
[  4]   0.00-100.00 sec  11.1 GBytes   954 Mbits/sec  0.099 ms  0/184761 (0%)
[  4] Sent 184761 datagrams

iperf Done.
```

Figure 12. Client Output Fields

The examples in Figure 11 and Figure 12 retain the original server and client output examples. Run the commands in this section for actual testing. Depending on the transfer direction, receive statistics are read on A or B; do not substitute the sender offered-load setting for the measured receive result.

8.4 Extended Tests and Result Recording

(1) To identify a host single-stream limit, append -P 4 to each TCP command and compare the receiver [SUM] result with the single-stream result, keeping all other conditions unchanged. If both versions support --bidir, run a separate simultaneous bidirectional TCP test and record each direction.

(2) The original Gigabit UDP comparison may be used after confirming Gigabit links at both ends and completing the wired baseline. Keep the server running on Computer A and execute the following on B:

```
iperf3 -c 192.168.10.2 -B 192.168.10.3 -u -b 1G -t 100
```

1G specifies the offered load and 100 specifies the duration in seconds. For the original large-datagram test, append -l 63k and run both forward and reverse directions separately; append -R for reverse. A 63k datagram exceeds the conventional Ethernet MTU and involves IP fragmentation and reassembly. Record it separately from the 1400-byte baseline test. Use identical payload lengths, loads and durations for wireless and wired comparisons.

(3) Once both directions are stable, extend the successfully tested load to 30 minutes or the duration specified for the project. For a 30-minute test, replace -t 60 with -t 1800. Record link interruptions, program exits and application reconnections separately. These are test procedures and do not constitute a record of completed testing.

(4) Save the complete output from both ends. Record the commands used, direction, duration, offered load, port speed, duplex, IP addresses, MTU, tool version and receiver statistics. Transfer is the amount of data transferred; Bandwidth/Bitrate is the transfer rate; Jitter is the variation in received datagram interarrival time; Lost/Total Datagrams gives the lost and total datagram counts. Calculate packet loss percentage as lost datagrams divided by total datagrams. Results showing 0 Bytes, 0/0 datagrams, connection failures or tool errors are not valid passes.

8.5 Wired Baseline and Assembly Verification

(1) Remove the link formed by the two modules and connect the computers directly with an Ethernet cable. Repeat the tests with the same IP addresses, actual port speeds, duplex, MTU, direction, offered load, duration and commands. Compare receiver throughput, packet loss, jitter and TCP retransmissions.

(2) Restore the wireless connection and repeat both directions with the final antenna spacing and alignment, enclosure, window material and thickness, brackets and secured wiring. Select test positions within the assembly and temperature conditions specified for this model. Record supply voltage, temperature, spacing, offset and duration.

(3) After servicing, cable replacement or mechanical adjustment, recheck power and mode settings, then repeat the communication tests. If a problem occurs, first use the wired baseline to check the hosts, cables and test configuration, then check antenna alignment, obstructions and power.

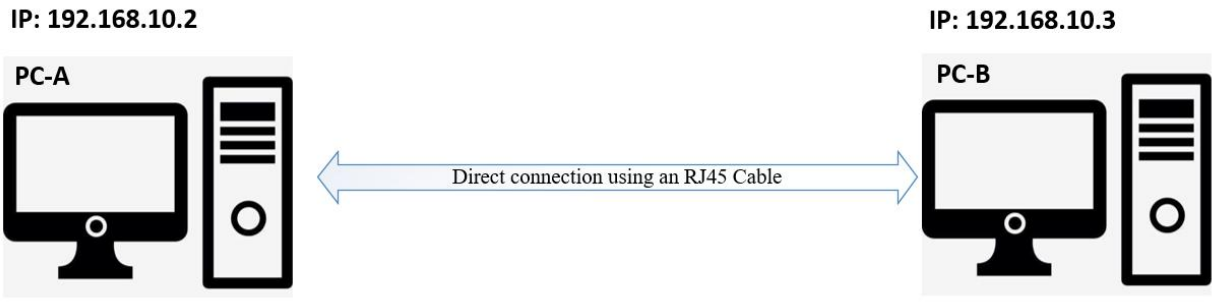

Figure 13. Wired Baseline with Two Computers Connected Directly by RJ45 Cable

In Figure 13, Direct connection using an RJ45 Cable identifies the direct Ethernet connection between the computers. Retain the same IP and port settings and run the same commands for comparison.

8.6 Functional and Application Verification

(1) Following the procedures in Chapter 4, check the actual link speed at both SK202A and SK202B. Cover the 10, 100 or 1000 Mbit/s speeds used by the application. If one device supports only 100 Mbit/s, limit the advertised speed on the faster device or insert a 100 Mbit/s switch, and check duplex status. The modules retain auto-negotiation.

(2) Reconnect the IP camera or actual Ethernet device and check the image and application data. Power-cycle the equipment, then disconnect and reconnect the Ethernet cables. Record port status, device online status and application recovery. Select test positions and temperatures according to the assembly and electrical conditions for this model.

9 Common Questions and Operating Checks

9.1 Common Questions and Corrective Actions

Table 6. Troubleshooting

Symptom	Checks and Corrective Action
RJ45 link not established	Check the power input, connector polarity and Ethernet cables. Check each end using known-good devices and cables.
Both local ports linked but no communication	Check negotiated speeds, IP addresses, subnet masks and firewalls at both ends. Confirm that antenna faces oppose each other with centers aligned.
Intermittent disconnection or increased packet loss	Check supply stability, mounting, spacing, antenna keep-out areas and metal obstructions. Repeat tests at the actual operating temperature.
No valid data at the test receiver	Confirm client/server roles and addresses. Check test-program permissions and commands, then restart the test.

(1) Disconnect power before wiring or adjusting the assembly. Keep both modules securely mounted during operation and avoid tension on power and Ethernet cables. After maintenance, recheck speeds as described in Section 7, then verify communication as described in Section 8.

9.2 Technical Support

When contacting technical support, provide the product model and revision, connections and settings at both ends, power-supply conditions, indicator states, symptoms and steps to reproduce the issue. Include wiring and assembly photographs, test settings and recorded results.

10 Certification and Compliance

10.1 Standard-Temperature Certification Information

Certification and compliance information for SK202A / SK202B is listed below.

Table 7. Certification and Compliance Information

Region / Item	Applicable Models	Certificate or Report No.	Issue Date
United States FCC equipment authorization	SK202A	FCC ID: 2AYEX-SK202A	2021-01-17
United States FCC equipment authorization	SK202B	FCC ID: 2AYEX-SK202B	2021-01-17

Region / Item	Applicable Models	Certificate or Report No.	Issue Date
Canada ISED radio certification	SK202A	26812-SK202A	2021-03-02
Canada ISED radio certification	SK202B	26812-SK202B	2021-03-02
Japan radio certification	SK202A	201-210255 / 00	2021-05-06
Japan radio certification	SK202B	201-210257 / 00	2021-05-06
European Union CE conformity assessment	SK202A / SK202B	MRT202101RSH54	2021-01-21

The FCC equipment authorization covers FCC Part 15C; RF testing is based on FCC Part 15.255. ISED radio certification is based on RSS-210 Issue 10. The Japanese certificates and their model annexes list the end-A and end-B products separately.

The CE conformity documentation under RED 2014/53/EU lists EN 305 550-2 V1.2.1 (RF), EN 301 489-1 V2.2.3 and EN 301 489-3 V2.1.1 (EMC), EN 62311:2008 (RF exposure), and EN 62368-1:2014+A11:2017 (safety).

10.2 Industrial-Temperature Certification and Class A Statement

Certification and compliance information for SK202AI / SK202BI is listed below.

Table 8. Certification and Compliance Information

Region / Item	Applicable Models	Certificate or Report No.	Issue Date
United States / Canada EMC compliance	SK202AI / SK202BI	MRT202103ESH55; report 2103RSU020-U1 Rev.01	2021-03-25
Canada ISED radio certification	SK202AI	26812-SK202A	2021-03-02
Canada ISED radio certification	SK202BI	26812-SK202B	2021-03-02
Japan radio certification	SK202AI	201-210255 / 00	2021-05-06
Japan radio certification	SK202BI	201-210257 / 00	2021-05-06

The EMC compliance documentation for the industrial-temperature models specifies FCC Part 15 Subpart B:2020 Class A and ICES-003 Issue 7 Class A, with testing to ANSI C63.4-2014. The ISED radio certificate lists SK202AI and SK202BI under RSS-210 Issue 10. The model annexes to the Japanese certificates list SK202AI and SK202BI, respectively.

This equipment has been tested and found to comply with the limits for a Class A digital device, pursuant to Part 15 of the FCC Rules.

These limits are designed to provide reasonable protection against harmful interference when the equipment is operated in a commercial environment. This equipment generates, uses and can radiate radio frequency energy and, if

not installed and used in accordance with the instruction manual, may cause harmful interference to radio communications.

Operation of this equipment in a residential area is likely to cause harmful interference in which case the user will be required to correct the interference at his own expense.

This device complies with Part 15 of the FCC Rules. Operation is subject to the following two conditions:

(1) This device may not cause harmful interference, and (2) this device must accept any interference received, including interference that may cause undesired operation.

FCC Caution: Any changes or modifications not expressly approved by the party responsible for compliance could void the user's authority to operate this equipment.

10.3 FCC Part 15 Class B Statement

This equipment has been tested and found to comply with the limits for a Class B digital device, pursuant to Part15 of the FCC Rules.

These limits are designed to provide reasonable protection against harmful interference in a residential installation. This equipment generate, uses and can radiate radio frequency energy and, if not installed and used in accordance with the instructions, may cause harmful interference to radio communications.

However, there is no guarantee that interference will not occur in a particular installation. If this equipment does cause harmful interference to radio or television reception, which can be determined by turning the equipment off and on, the user is encouraged to try to correct the interference by one of the following measures:

Reorient or relocate the receiving antenna.

Increase the separation between the equipment and receiver.

Connect the equipment into an outlet on a circuit different from that to which the receiver is connected.

Consult the dealer or an experienced radio/TV technician for help.

This device complies with Part 15 of the FCC Rules. Operation is subject to the following two conditions:

(1) This device may not cause harmful interference, and (2) this device must accept any interference received, including interference that may cause undesired operation.

FCC Caution: Any changes or modifications not expressly approved by the party responsible for compliance could void the user's authority to operate this equipment.

10.4 RF Exposure Warning

This equipment complies with FCC radiation exposure limits set forth for an uncontrolled environment.

This product may not be collocated or operated in conjunction with any other antenna or transmitter

This equipment must be installed and operated in accordance with provided instructions and the antenna(s) used for this transmitter must be installed to provide a separation distance of at least 20 cm from all persons and must not be collocated or operating in conjunction with any other antenna or transmitter.

11 Revision History

Date	Revision	Description of Changes
2020-11-02	V1.0	Initial release.
2021-01-08	V1.1	Updated feature parameters and FCC information.
2021-03-17	V1.2	Updated Ethernet port indicator descriptions.
2022-04-19	V1.3	Corrected an error in Figure 3.
2026-06-01	V1.4	Updated Ethernet port indicator descriptions.
2026-11-05	V1.5	(1) Prepared this English user manual from the reviewed Chinese edition, restoring the original connection instructions, speed-mismatch explanation and three illustrated auto-negotiation examples. (2) Expanded the antenna keep-out, surrounding-area and metal-enclosure window requirements; retained the assembly drawings and complete operating conditions. (3) Expanded the iperf3 UDP tests, wired baseline, large-datagram tests and result terminology; distinguished historical output examples from test records. (4) Expanded troubleshooting and maintenance retests; retained FCC and RF exposure statements and standardized system diagrams, matching device blocks, figure numbers and references. (5) Equalized the Min., Typ. and Max. columns in parameter tables, retaining all values, conditions, units, font sizes and standard line spacing. (6) Arranged revision history entries from oldest to newest, preserving their original dates, revisions and descriptions. (7) Standardized section names, order and content allocation using the common outline, retaining technical explanations and illustrations; rebuilt the contents, figure/table numbering and internal references. Moved initial power-up under Power-Up and Operation; standardized Common Questions and Usage Checks and added the information required for technical support. Added applicable model-specific certification and compliance information immediately before Revision History. (8) Standardized Ethernet test sections; added bidirectional reachability, TCP, UDP loads by actual link speed, extended records and wired comparisons, with functional checks tailored to this model's configuration. Retained the original test illustrations and updated contents and internal references. (9) Prepared and checked this English edition against the current Chinese edition, preserving numbered items, parameters, illustrations, commands and operating instructions.