V2.3 · 2026-11-04

SK-RF CO.,Ltd

DATASHEET

SK202 Module Datasheet

Standard-Temperature Contactless Gigabit Ethernet Connection

Document Type	Product Datasheet
Applicable Product	SK202A / SK202B
Release Date	2026-11-04
Document Version	V2.3

Document Summary: Describes the functions, interfaces, mounting dimensions, electrical and RF parameters, matched link-speed requirements, certification information and FCC statements of the SK202A / SK202B standard-temperature contactless modules for product selection and system integration.

Contents

1 Product Overview
2 Features
3 Applications
4 Block Diagram and Appearance
5 Interface Definitions
6 Electrical Characteristics
7 Auto-Negotiation
8 Assembly Instructions
9 Product Model
10 Certification and Compliance
10.1 Certification Information
10.2 FCC Part 15
10.3 RF Exposure Warning
11 Revision History

1 Product Overview

The SK202 series provides short-range contactless Gigabit Ethernet connections based on the ST60A2 millimeter-wave transceiver. SK202A and SK202B operate as a pair. Each module integrates an Ethernet physical-layer transceiver (PHY), millimeter-wave circuitry and horizontally and vertically polarized horn antennas to convert Ethernet signals into 60 GHz millimeter-wave signals for bidirectional full-duplex data transmission.

The external RJ45 port supports 10/100/1000BASE-T Ethernet. The operating ambient temperature range is 0 to +70 °C.

2 Features

- 60 GHz V-band millimeter-wave communication with horizontally and vertically polarized channels.
- Supports 10/100/1000 Mbit/s Ethernet interfaces; both ports must operate at the same actual link speed.
- Full-duplex transmission between facing modules; horizontally and vertically polarized horn antennas provide the two data directions.
- Designed for short-range connections over a few centimeters. The recommended mounting gap is no greater than 3 cm. See Table 4.
- RJ45 MDI Ethernet interface with PHY auto-negotiation always enabled.
- SK202A and SK202B operate as a pair, with a separate power supply at each end.

3 Applications

- Modular LED displays and video walls.
- Video-surveillance cameras and robotic equipment.
- Contactless Ethernet applications.

4 Block Diagram and Appearance



Figure 1. SK202 paired connection block diagram

SK202A and SK202B connect to their respective local Ethernet devices through RJ45. DC JACK and USB MICRO-B provide the DC power inputs.

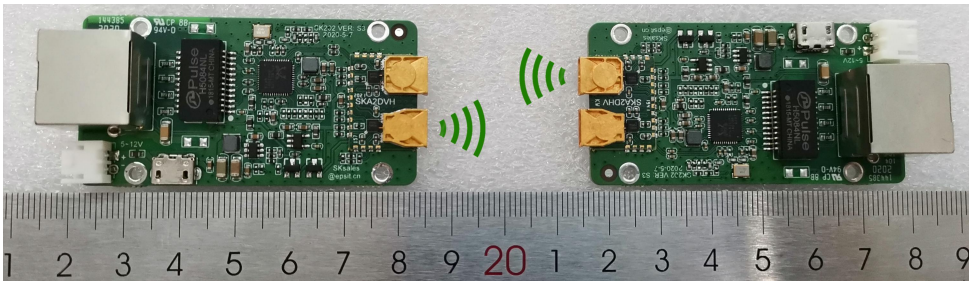

Figure 2. SK202 Series Modules in a Paired Assembly

The example in Figure 2 shows the locations of the RJ45 port, power inputs and horn antennas.

5 Interface Definitions

The DC JACK and USB MICRO-B power inputs are internally connected. Use only one power input on each module; do not connect two supplies simultaneously. USB MICRO-B supplies power only and does not carry USB data. Check connector polarity and supply requirements before connecting power.

Table 1. Interface definitions

Marking	Description
RJ45	10/100/1000BASE-T wired Ethernet port
DC JACK	DC power input, internally connected to the USB MICRO-B power path
USB MICRO-B	Power input only; no USB data communication

6 Electrical Characteristics

Table 2 lists the recommended operating conditions and electrical characteristics; Table 3 lists the RF parameters.

Table 2. Electrical and Temperature Parameters

Symbol	Parameter	Min.	Typ.	Max.	Unit
V_{IN}	Input voltage	4.4	12	16	V
I_{IN}	Input current*	-	50	80	mA
P	Total power consumption	-	0.6	-	W
T_A	Operating ambient temperature	0	-	+70	°C
T_J	Maximum junction temperature	-	-	+125	°C
T_{STG}	Storage temperature	−40	-	+105	°C

Note *: Input current is measured with a 12 V supply and Ethernet active. Typical and maximum currents are listed separately. Total power consumption is a typical value.

Table 3. RF parameters

Symbol	Parameter	Min.	Typ.	Max.	Unit
F_{OSC}	Carrier frequency	60.3	60.4	60.5	GHz

Position the horn antennas opposite each other with their centers aligned. Select the mounting gap using Table 4.

7 Auto-Negotiation

The Ethernet PHY supports 10, 100 and 1000 Mbit/s, with auto-negotiation always enabled. Each module negotiates independently with the equipment connected to its local RJ45 port. When the modules operate as a pair, both wired ports must negotiate the same link speed.

For example, if one end connects to equipment operating only at 100 Mbit/s, configure the equipment at the other end to negotiate 100 Mbit/s as well. Confirm the actual link speed at both ends after connection.

8 Assembly Instructions

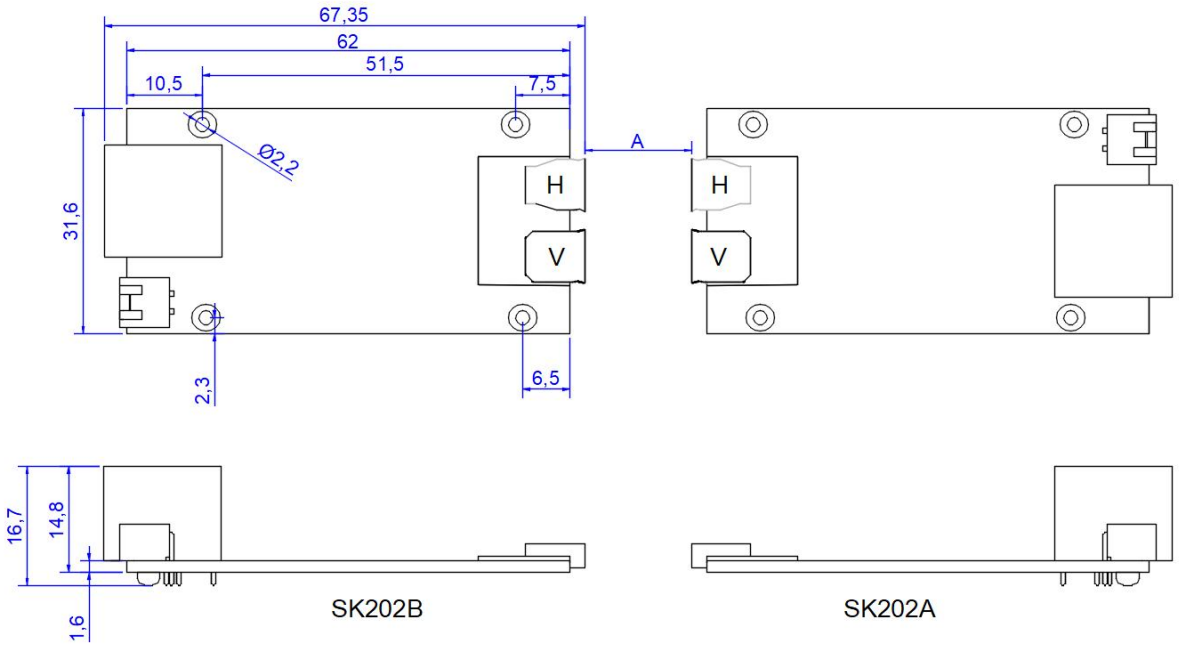

Figure 3. SK202 PCBA Mounting Dimensions and Antenna Gap (unit: mm)

In Figure 3, A denotes the mounting gap between the opposing horn antennas; H and V identify the horizontally and vertically polarized channels. Install SK202A and SK202B facing each other in the orientations shown and align their antennas. Secure the modules so that cable strain cannot change their positions. Dimensions are as marked on the drawing.

Provide an RF window in any metal enclosure along the millimeter-wave propagation path. The window may be filled with plastic or another material suitable for millimeter-wave transmission. Window material, thickness and geometry affect transmission; keep metal out of the wireless path between the antennas.

Table 4. Mounting Gap and Applicable Temperature Conditions

Symbol	Parameter and Applicable Conditions	Min.	Typ.	Max.	Unit
L	Mounting gap A, 0 to +50 °C	1	2	5	cm

Table 4 applies at operating ambient temperatures from 0 to +50 °C.

9 Product Model

Table 5. Product Models

Product Models	Description
SK202A	Contactless Gigabit Ethernet module with SKA2DHV horn antennas; 0 to +70 °C operating range; end A.
SK202B	Contactless Gigabit Ethernet module with SKA2DVH horn antennas; 0 to +70 °C operating range; end B.

End A uses SKA2DHV horn antennas to transmit with vertical polarization and receive with horizontal polarization; end B uses SKA2DVH horn antennas to transmit with horizontal polarization and receive with vertical polarization. The pair forms a bidirectional full-duplex link.

10 Certification and Compliance

10.1 Certification Information

Certification and compliance information for SK202A / SK202B is listed below.

Table 6. Certification and Compliance Information

Region / Item	Applicable Models	Certificate or Report No.	Issue Date
United States FCC equipment authorization	SK202A	FCC ID: 2AYEX-SK202A	2021-01-17
United States FCC equipment authorization	SK202B	FCC ID: 2AYEX-SK202B	2021-01-17
Canada ISED radio certification	SK202A	26812-SK202A	2021-03-02
Canada ISED radio certification	SK202B	26812-SK202B	2021-03-02
Japan radio certification	SK202A	201-210255 / 00	2021-05-06
Japan radio certification	SK202B	201-210257 / 00	2021-05-06
European Union CE conformity assessment	SK202A / SK202B	MRT202101RSH54	2021-01-21

The FCC equipment authorization covers FCC Part 15C; RF testing is based on FCC Part 15.255. ISED radio certification is based on RSS-210 Issue 10. The Japanese certificates and their model annexes list the end-A and end-B products separately.

The CE conformity documentation under RED 2014/53/EU lists EN 305 550-2 V1.2.1 (RF), EN 301 489-1 V2.2.3 and EN 301 489-3 V2.1.1 (EMC), EN 62311:2008 (RF exposure), and EN 62368-1:2014+A11:2017 (safety).

10.2 FCC Part 15

This equipment has been tested and found to comply with the limits for a Class B digital device, pursuant to Part15 of the FCC Rules.

These limits are designed to provide reasonable protection against harmful interference in a residential installation. This equipment generate, uses and can radiate radio frequency energy and, if not installed and used in accordance with the instructions, may cause harmful interference to radio communications.

However, there is no guarantee that interference will not occur in a particular installation. If this equipment does cause harmful interference to radio or television reception, which can be determined by turning the equipment off and on, the user is encouraged to try to correct the interference by one of the following measures:

- Reorient or relocate the receiving antenna.
- Increase the separation between the equipment and receiver.
- Connect the equipment into an outlet on a circuit different from that to which the receiver is connected.
- Consult the dealer or an experienced radio/TV technician for help.

This device complies with Part 15 of the FCC Rules. Operation is subject to the following two conditions:

(1) This device may not cause harmful interference, and (2) this device must accept any interference received, including interference that may cause undesired operation.

FCC Caution: Any changes or modifications not expressly approved by the party responsible for compliance could void the user's authority to operate this equipment.

10.3 RF Exposure Warning

This equipment complies with FCC radiation exposure limits set forth for an uncontrolled environment.

This product may not be collocated or operated in conjunction with any other antenna or transmitter

This equipment must be installed and operated in accordance with provided instructions and the antenna(s) used for this transmitter must be installed to provide a separation distance of at least 20 cm from all persons and must not be collocated or operating in conjunction with any other antenna or transmitter.

The minimum 20 cm separation between persons and the transmitting antenna is an RF exposure requirement. It is separate from the centimeter-scale mounting gap between the modules; both requirements apply.

11 Revision History

Date	Revision	Description of Changes
2019-11-11	V1.6	Initial draft, based on SK20x_SPEC_1.3.
2020-10-28	V2.0	Updated electrical characteristics.
2020-11-25	V2.1	Added FCC information.
2021-02-25	V2.2	Removed model entries SK202AC/AI and SKA202BC/BI.
2026-11-04	V2.3	(1) Prepared this English datasheet from the reviewed Chinese edition, retaining the SK202A/B models, 0 to +70 °C operating range and assembly conditions. (2) Expanded the RJ45 interface description, independent auto-negotiation and matched link-speed requirements; organized supply and carrier-frequency parameters. (3) Retained the FCC Part 15 statement and RF exposure warning; standardized assembly sections, contents and historical revision descriptions. (4) Equalized the Min., Typ. and Max. columns while retaining all values, conditions, units, font sizes and standard row spacing. (5) Arranged revisions from oldest to newest, retaining the original dates, revision numbers and historical changes. (6) Standardized chapter names and outline order against the reviewed product documents, retaining model-specific functions and detailed instructions; updated the contents, figure/table numbering and internal references. Listed applications individually using the original datasheet. (7) Moved Assembly Instructions immediately before Product Models and updated chapter numbers, figure/table numbering, contents and internal references. (8) Refined the product overview to integrate the chipset platform naturally into the module, antenna and functional descriptions, retaining model-specific capabilities, pairing requirements and parameters. (9) Added model-specific certification and compliance information, certificate numbers, dates and applicable standards, and updated the contents. Retained the complete FCC Part 15 statement and RF exposure warning. (10) Standardized chapter names, order and content allocation using the common outline, retaining technical descriptions and illustrations; updated the contents, figure/table numbering and internal references. (11) Prepared and checked this English edition against the current Chinese edition, preserving numbered items, parameters, illustrations, commands and operating instructions.